2017 MULE PRO-DXT™ DIESEL

PARTS DIAGRAM

Muffler(s)

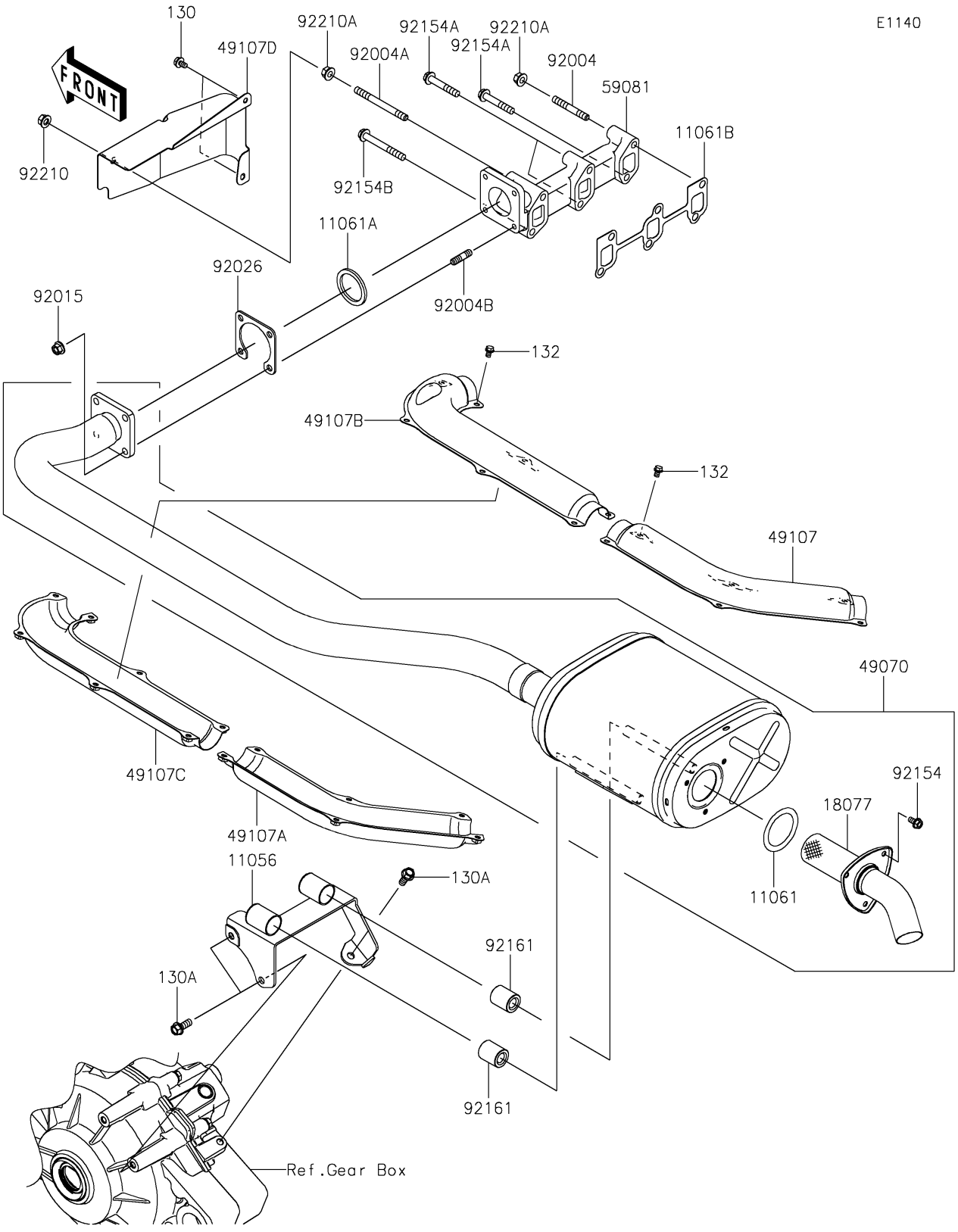

© 2026 Kawasaki Motors Corp., U.S.A.

2017 MULE PRO-DXT™ DIESEL

PARTS LIST

Muffler(s)

ITEM NAME	PART NUMBER	QUANTITY
BRACKET,MUFFLER MOUNT (Ref # 11056)	11056-7806	1
GASKET,EXHAUST PIPE (Ref # 11061)	11061-0013	1
GASKET,EXHAUST HOLDER (Ref # 11061A)	11061-0989	1
GASKET,EXHAUST MANIFOLD (Ref # 11061B)	11061-1194	1
BOLT-FLANGED,6X10 (Ref # 130)	130BA0610	2
BOLT-FLANGED,8X20 (Ref # 130A)	130BA0820	3
BOLT-FLANGED-SMALL,6X8 (Ref # 132)	132BD0608	13
ARRESTER-SPARK (Ref # 18077)	18077-0040	1
MUFFLER-COMP (Ref # 49070)	49070-0844	1
COVER-EXHAUST PIPE,RR,UPP (Ref # 49107)	49107-0771	1
COVER-EXHAUST PIPE,RR,LWR (Ref # 49107A)	49107-0772	1
COVER-EXHAUST PIPE,FR,UPP (Ref # 49107B)	49107-0773	1
COVER-EXHAUST PIPE,FR,LWR (Ref # 49107C)	49107-0774	1
COVER-EXHAUST PIPE (Ref # 49107D)	49107-0786	1
MANIFOLD-EXHAUST (Ref # 59081)	59081-0295	1
STUD,8X50 (Ref # 92004)	92004-0746	1
STUD,8X80 (Ref # 92004A)	92004-0747	1
STUD,8X22 (Ref # 92004B)	92004-0748	4
NUT,8MM (Ref # 92015)	92015-1402	4
SPACER (Ref # 92026)	92026-0817	1
BOLT,FLANGED,6X12 (Ref # 92154)	92154-0852	3
BOLT,FLANGED,8X50 (Ref # 92154A)	92154-1990	3
BOLT,FLANGED,8X71 (Ref # 92154B)	92154-1991	1
DAMPER (Ref # 92161)	92161-0961	2
NUT,8MM (Ref # 92210)	92210-1456	1
NUT,8MM (Ref # 92210A)	92210-1473	2

© 2026 Kawasaki Motors Corp., U.S.A.