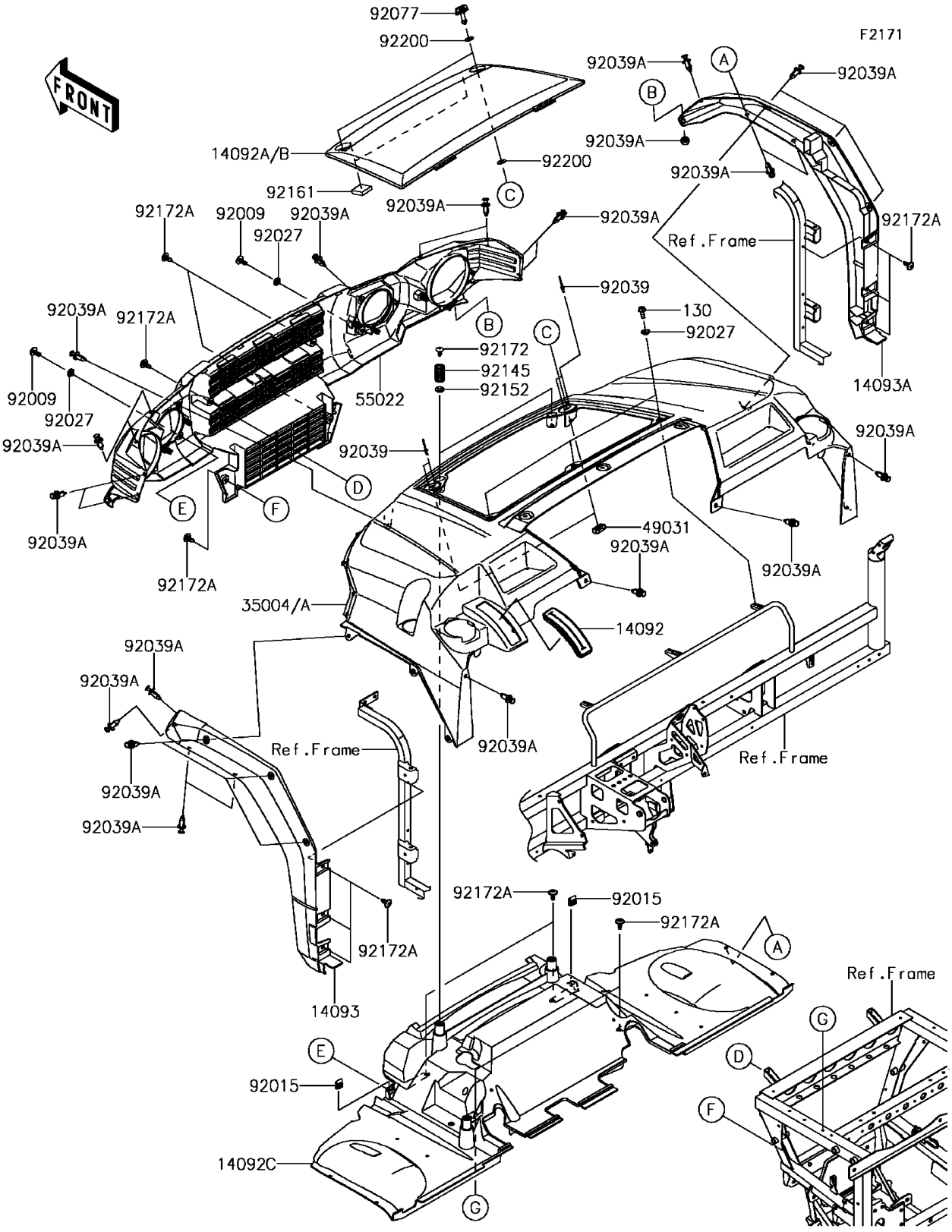
2017 Mule PRO-FX EPS LE

PARTS DIAGRAM

Front Fender(s)


FRONT
F2171
92077
92200
14092A/B
92200
92161
92039A
92172A
92009
92027
92039A
92039A
92039A

2017 Mule PRO-FX EPS LE

PARTS LIST

Front Fender(s)

ITEM NAME	PART NUMBER	QUANTITY

© 2026 Kawasaki Motors Corp., U.S.A.