1995 KX125

PARTS DIAGRAM

Side Covers

F2611



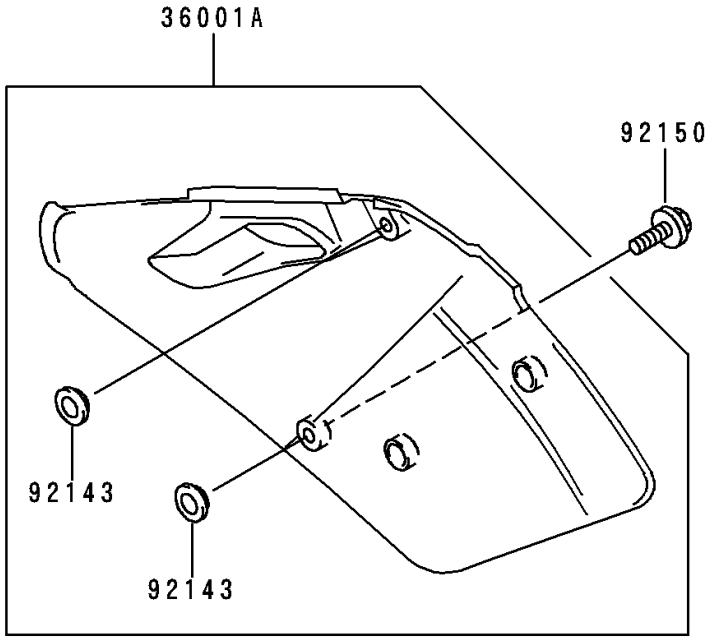

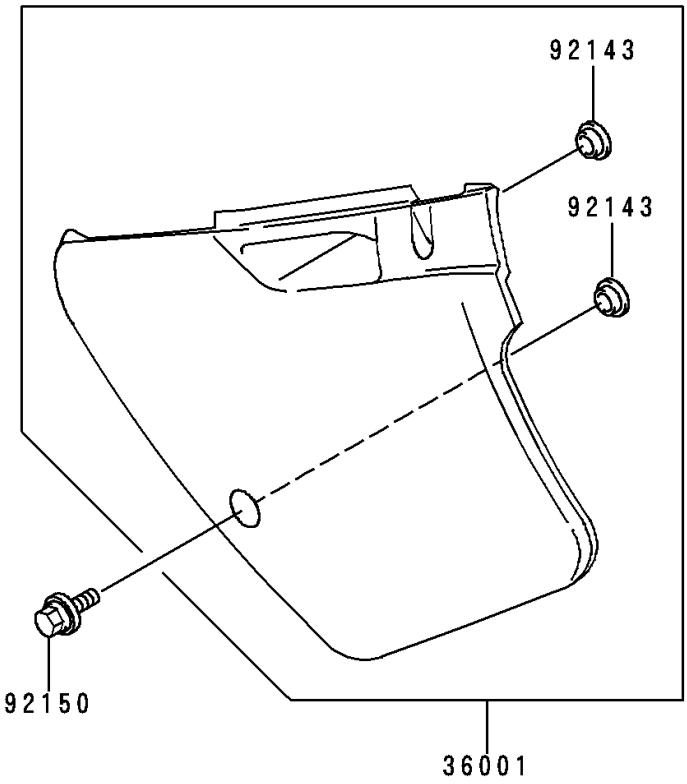

© 2026 Kawasaki Motors Corp., U.S.A.

1995 KX125

PARTS LIST

Side Covers

ITEM NAME	PART NUMBER	QUANTITY
COVER-SIDE,LH,P.WHITE (Ref # 36001)	36001-1538-6F	1
COVER-SIDE,RH,P.WHITE (Ref # 36001A)	36001-1539-6F	1
COLLAR (Ref # 92143)	92143-1196	4
BOLT,6X20 (Ref # 92150)	92150-1339	2

© 2026 Kawasaki Motors Corp., U.S.A.