1995 KX125

PARTS DIAGRAM

Rear Hub

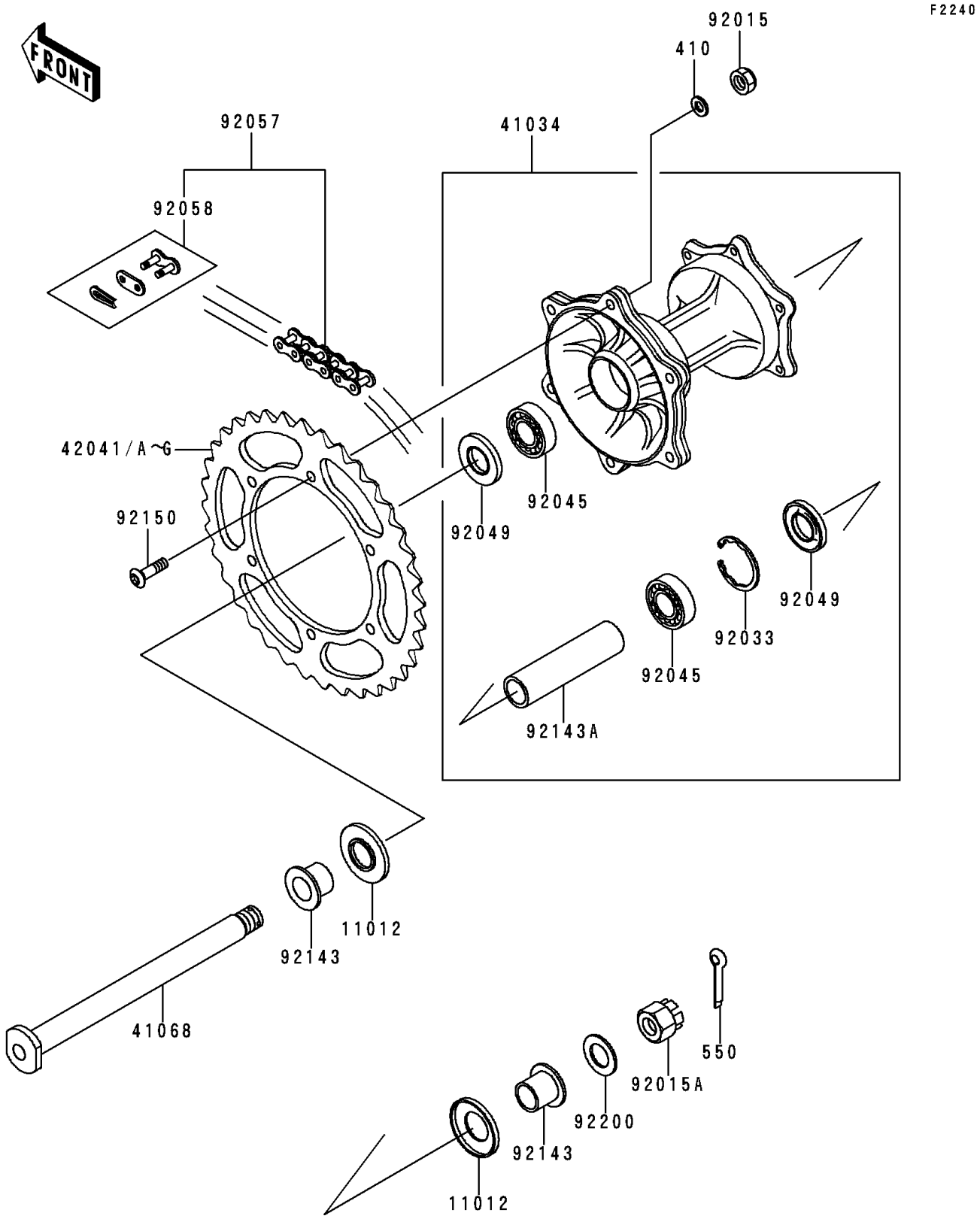

© 2026 Kawasaki Motors Corp., U.S.A.

1995 KX125

PARTS LIST

Rear Hub

ITEM NAME	PART NUMBER	QUANTITY
WASHER-PLAIN-SMALL,8MM (Ref # 410)	410B0800	6
PIN-COTTER,3.0X25 (Ref # 550)	550D3025	1
CAP,AXLE (Ref # 11012)	11012-1581	2
DRUM-ASSY,REAR BRAKE (Ref # 41034)	41034-1205	1
AXLE,RR (Ref # 41068)	41068-1343	1
SPROCKET-HUB,51T,AL (Ref # 42041)	42041-1104	1
SPROCKET-HUB,50T,AL (Ref # 42041A)	42041-1255	1
SPROCKET-HUB,49T,AL (Ref # 42041B)	42041-1256	1
SPROCKET-HUB,48T,AL (Ref # 42041C)	42041-1257	1
SPROCKET-HUB,47T,AL (Ref # 42041D)	42041-1258	1
SPROCKET-HUB,48T (Ref # 42041E)	42041-1383	1
SPROCKET-HUB,49T (Ref # 42041F)	42041-1384	1
SPROCKET-HUB,50T (Ref # 42041G)	42041-1408	1
NUT,8MM (Ref # 92015)	92015-1432	6
NUT,CASTLE,18MM (Ref # 92015A)	92015-1885	1
RING-SNAP,42MM (Ref # 92033)	92033-1041	1
BEARING-BALL,6004X8JRLLX2/3A (Ref # 92045)	92045-1239	2
SEAL-OIL,BJNC2 25425 (Ref # 92049)	92049-1203	2
CHAIN,DRIVE,DID520DS5X110L (Ref # 92057)	92057-1388	1
JOINT-CHAIN,DRIVE (Ref # 92058)	92058-1071	1
COLLAR,RR AXLE,L=20 (Ref # 92143)	92143-1356	2
COLLAR,RR BRAKE DRUM,L=105 (Ref # 92143A)	92143-1402	1
BOLT,SOCKET,8X28 (Ref # 92150)	92150-1196	6
WASHER,18.5X32X2.3 (Ref # 92200)	92200-1149	1

© 2026 Kawasaki Motors Corp., U.S.A.