# 1995 KX125

## PARTS DIAGRAM

### Radiator

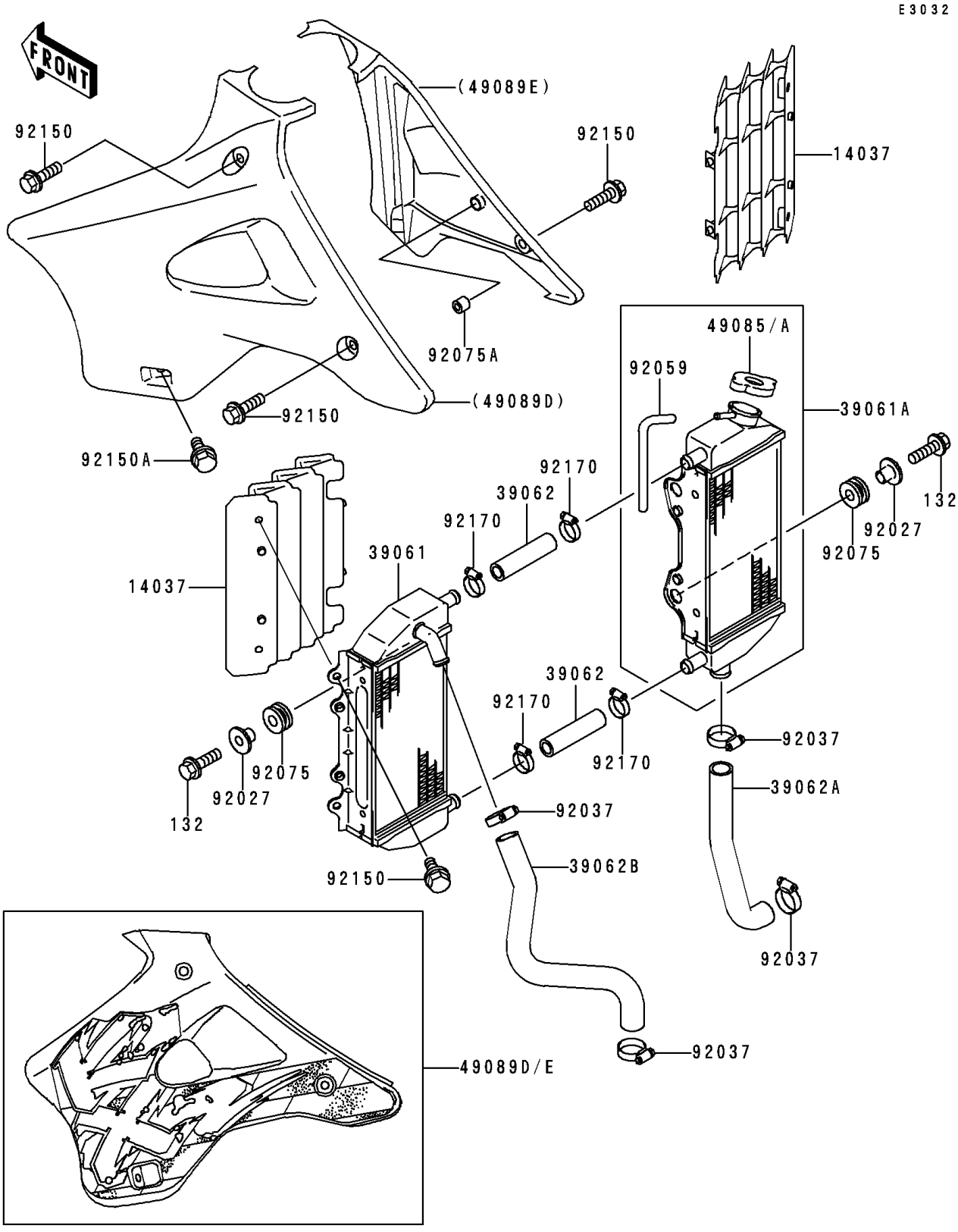


© 2026 Kawasaki Motors Corp., U.S.A.

# 1995 KX125

## PARTS LIST

### Radiator

| ITEM NAME | PART NUMBER | QUANTITY |
|---|---|---|
| BOLT-FLANGED-SMALL (Ref # 132) | 132G0620 | 4 |
| SCREEN,L.GREEN (Ref # 14037) | 14037-1179-6W | 2 |
| RADIATOR-ASSY,LH (Ref # 39061) | 39061-1197 | 1 |
| RADIATOR-ASSY,RH (Ref # 39061A) | 39061-1198 | 1 |
| HOSE-COOLING,RADIATOR,LH-RH (Ref # 39062) | 39062-1551 | 2 |
| HOSE-COOLING,RADIATOR,RH-PUMP (Ref # 39062A) | 39062-1553 | 1 |
| HOSE-COOLING,HEAD-RADIATOR,LH (Ref # 39062B) | 39062-1554 | 1 |
| CAP-ASSY-PRESSURE,P=1.6 (Ref # 49085) | 49085-1059 | 1 |
| CAP-ASSY-PRESSURE (Ref # 49085A) | 49085-1066 | 1 |
| SHROUD-ENGINE,LH,L.GREEN (Ref # 49089D) | 49089-5232-6W | 1 |
| SHROUD-ENGINE,RH,L.GREEN (Ref # 49089E) | 49089-5233-6W | 1 |
| COLLAR,L=11.1 (Ref # 92027) | 92027-194 | 4 |
| CLAMP,COOLING HOSE (Ref # 92037) | 92037-1589 | 4 |
| TUBE,5X9X600 (Ref # 92059) | 92059-1259 | 1 |
| DAMPER (Ref # 92075) | 92075-209 | 4 |
| DAMPER,AIR FILTER (Ref # 92075A) | 92075-217 | 2 |
| BOLT,6X12 (Ref # 92150) | 92150-1435 | 6 |
| BOLT,6X20 (Ref # 92150A) | 92150-1801 | 2 |
| CLAMP (Ref # 92170) | 92170-1283 | 4 |

© 2026 Kawasaki Motors Corp., U.S.A.