1995 KX125

PARTS DIAGRAM

Engine Cover(s)

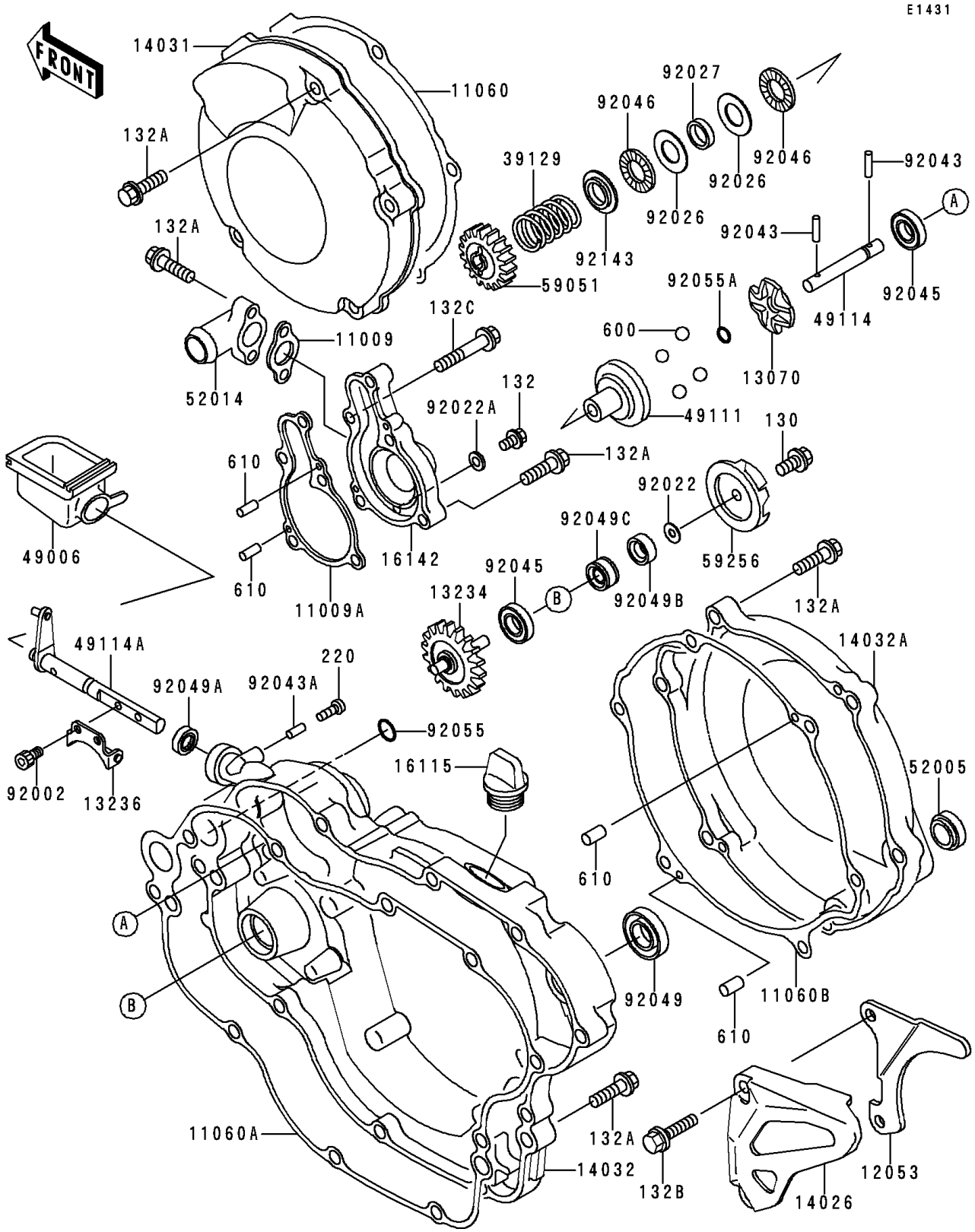

© 2026 Kawasaki Motors Corp., U.S.A.

1995 KX125

PARTS LIST

Engine Cover(s)

ITEM NAME	PART NUMBER	QUANTITY
GASKET,ELBOW (Ref # 11009)	11009-1935	1
GASKET,PUMP COVER (Ref # 11009A)	11009-1936	1
GASKET,GENERATOR COVER (Ref # 11060)	11060-1189	1
GASKET,CLUTCH COVER,INSIDE (Ref # 11060A)	11060-1350	1
GASKET,CLUTCH COVER,OUTSIDE (Ref # 11060B)	11060-1351	1
GUIDE-CHAIN (Ref # 12053)	12053-1325	1
GUIDE (Ref # 13070)	13070-1122	1
SHAFT-COMP,PUMP (Ref # 13234)	13234-1099	1
LEVER-COMP,GOVERNOR (Ref # 13236)	13236-1266	1
COVER-CHAIN (Ref # 14026)	14026-1193	1
COVER-GENERATOR (Ref # 14031)	14031-1262	1
COVER-CLUTCH,INSIDE (Ref # 14032)	14032-1347	1
COVER-CLUTCH,OUTSIDE (Ref # 14032A)	14032-1348	1
CAP-OIL FILLER (Ref # 16115)	16115-018	1
COVER-PUMP (Ref # 16142)	16142-1127	1
SPRING-GOVERNER (Ref # 39129)	39129-1001	1
BOOT,GOVERNOR (Ref # 49006)	49006-1285	1
HOLDER-GOVERNOR WEIGHT (Ref # 49111)	49111-1057	1
SHAFT-GOVERNOR (Ref # 49114)	49114-1058	1
SHAFT-GOVERNOR (Ref # 49114A)	49114-1085	1
GAUGE,OIL LEVEL (Ref # 52005)	52005-1055	1
ELBOW (Ref # 52014)	52014-1072	1
GEAR-SPUR,GOVERNOR (Ref # 59051)	59051-1297	1
IMPELLER (Ref # 59256)	59256-1065	1
BOLT,SOCKET,4X8 (Ref # 92002)	92002-1403	2
WASHER,5.2X13X1 (Ref # 92022)	92022-1380	1
WASHER,6.2X11X1 (Ref # 92022A)	92022-304	1
SPACER,15X28X1 (Ref # 92026)	92026-1238	2
COLLAR,15.2X17X4 (Ref # 92027)	92027-1839	1

© 2026 Kawasaki Motors Corp., U.S.A.

1995 KX125

PARTS LIST

Engine Cover(s)

ITEM NAME	PART NUMBER	QUANTITY
PIN,3X12.8 (Ref # 92043)	92043-1256	2
PIN,2X9.8 (Ref # 92043A)	92043-1293	1
BEARING-BALL,608MC3 (Ref # 92045)	92045-1305	2
BEARING-NEEDLE,AXK1102 (Ref # 92046)	92046-1052	2
SEAL-OIL,SB16244 (Ref # 92049)	92049-002	1
SEAL-OIL,SDO8144 (Ref # 92049A)	92049-1207	1
SEAL-OIL,MH8X18X3.5-A (Ref # 92049B)	92049-1359	1
SEAL-OIL,MHSD8X18X10J-1 (Ref # 92049C)	92049-1366	1
RING-O (Ref # 92055)	92055-086	1
RING-O,5.5X1.5 (Ref # 92055A)	92055-1343	1
COLLAR (Ref # 92143)	92143-1001	1
BOLT-FLANGED (Ref # 130)	130P0514	1
BOLT-FLANGED-SMALL (Ref # 132)	132G0608	1
BOLT-FLANGED-SMALL (Ref # 132A)	132G0625	26
BOLT-FLANGED-SMALL (Ref # 132B)	132G0630	2
BOLT-FLANGED-SMALL (Ref # 132C)	132G0655	1
SCREW-PAN-CROS (Ref # 220)	220B0306	1
BALL-STEEL,5/16" (Ref # 600)	600A1000	4
ROLLER,4X8 (Ref # 610)	610A0408	4

© 2026 Kawasaki Motors Corp., U.S.A.