# 2016 MULE PRO-DX™ EPS LE DIESEL

## PARTS DIAGRAM

### Guard(s)

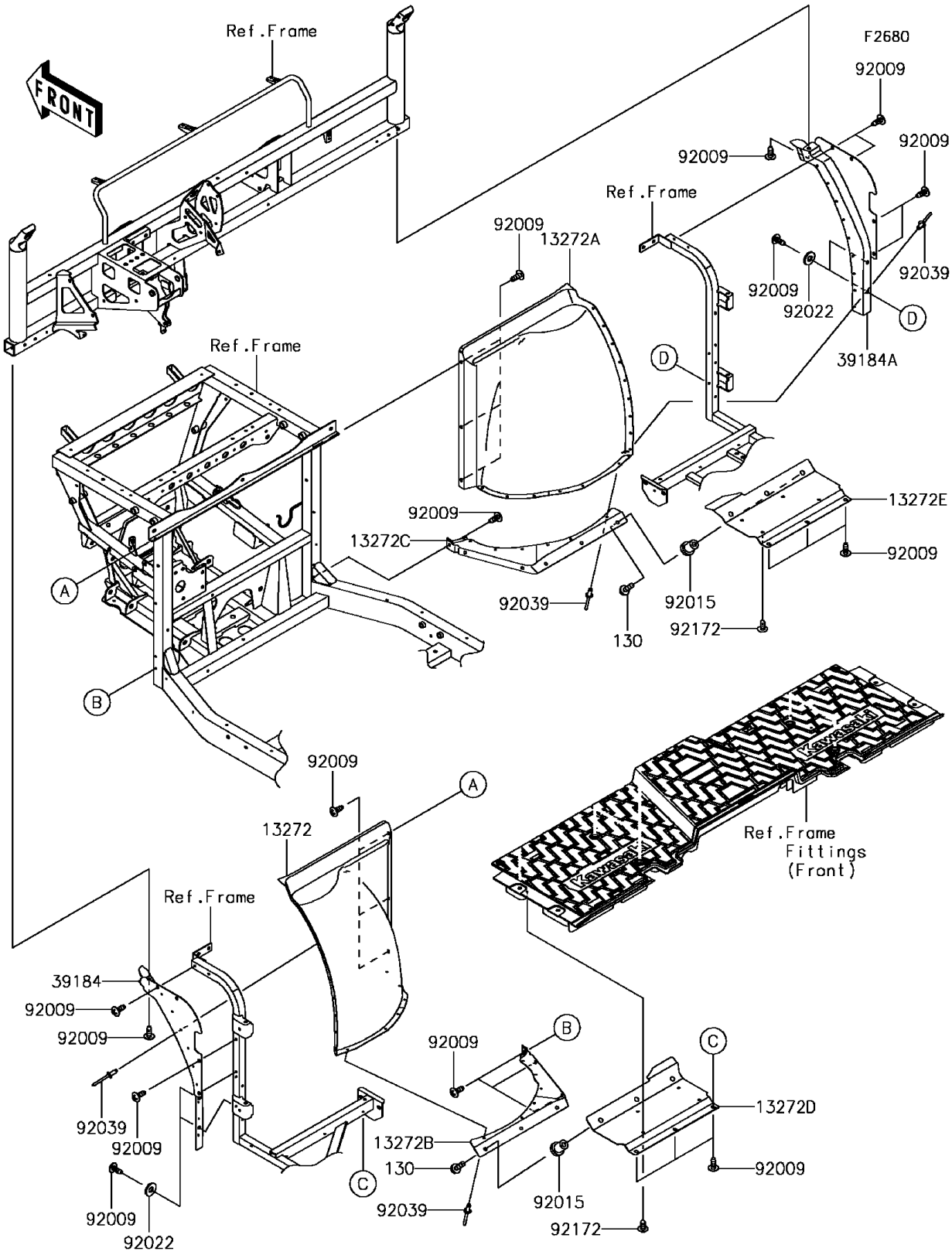


© 2026 Kawasaki Motors Corp., U.S.A.

# 2016 MULE PRO-DX™ EPS LE DIESEL

Kawasaki
Let the Good Times Roll®

## PARTS LIST

### Guard(s)

| ITEM NAME | PART NUMBER | QUANTITY |
|---|---|---|
| BOLT-FLANGED,6X20 (Ref # 130) | 130BA0620 | 6 |
| PLATE (Ref # 13272) | 13272-2323 | 1 |
| PLATE (Ref # 13272A) | 13272-2324 | 1 |
| PLATE (Ref # 13272B) | 13272-2327 | 1 |
| PLATE (Ref # 13272C) | 13272-2328 | 1 |
| PLATE,UNDER GUARD,LH (Ref # 13272D) | 13272-2330 | 1 |
| PLATE,UNDER GUARD,RH (Ref # 13272E) | 13272-2331 | 1 |
| BRACKET-ASSY,SIDE,LH (Ref # 39184) | 39184-0718 | 1 |
| BRACKET-ASSY,SIDE,RH (Ref # 39184A) | 39184-0719 | 1 |
| SCREW,TAPPING,6X16 (Ref # 92009) | 92009-1166 | 32 |
| NUT,RUBBER,6MM (Ref # 92015) | 92015-1692 | 6 |
| WASHER,8.2X19X2 (Ref # 92022) | 92022-1533 | 4 |
| RIVET (Ref # 92039) | 92039-0778 | 30 |
| SCREW,6X16 (Ref # 92172) | 92172-0284 | 8 |

© 2026 Kawasaki Motors Corp., U.S.A.