2020 KLX®150L

PARTS DIAGRAM

Clutch

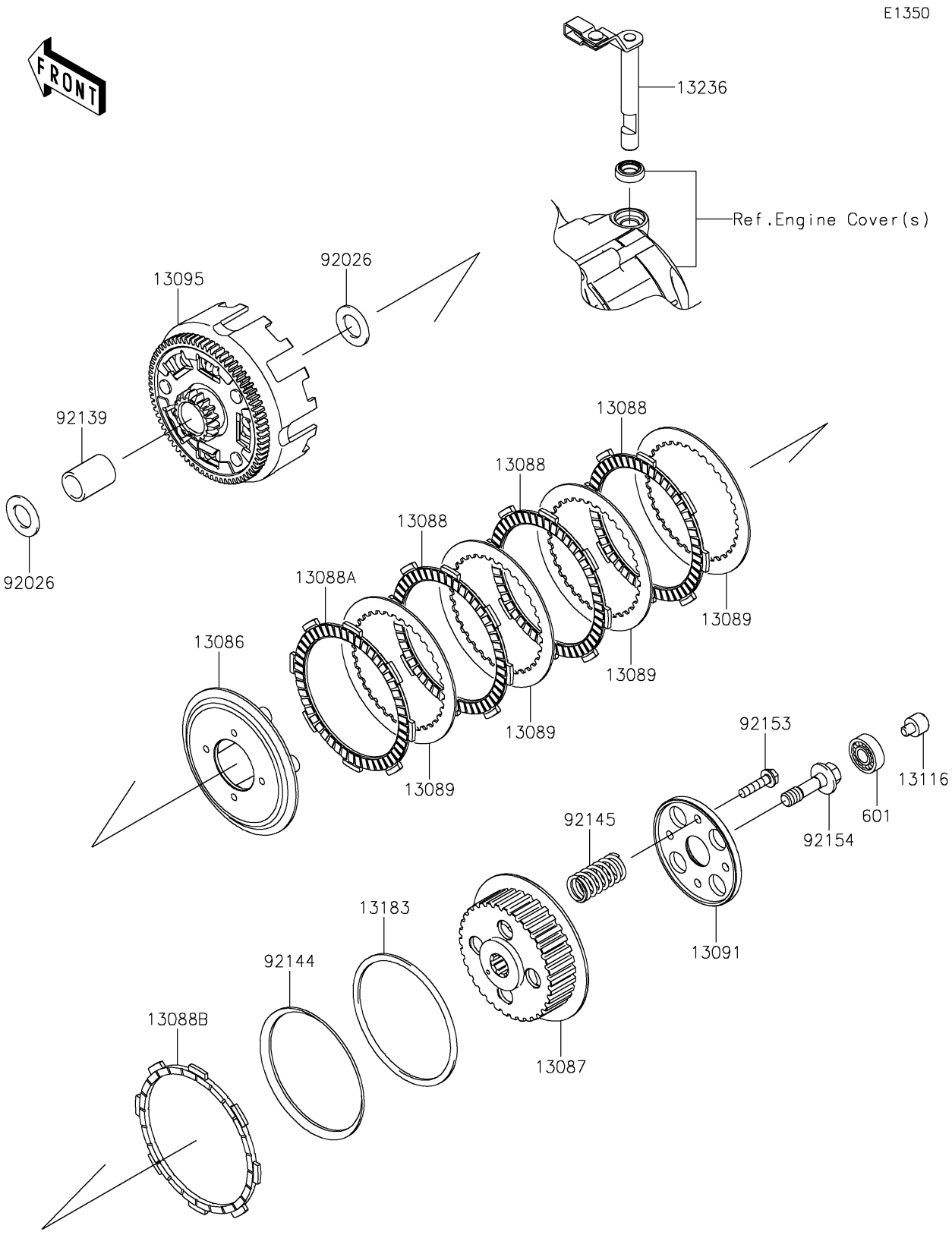

© 2026 Kawasaki Motors Corp., U.S.A.

2020 KLX®150L

PARTS LIST

Clutch

ITEM NAME	PART NUMBER	QUANTITY
WHEEL-CLUTCH (Ref # 13086)	13086-1070	1
HUB-CLUTCH (Ref # 13087)	13087-1161	1
PLATE-FRICTION (Ref # 13088)	13088-0040	3
PLATE-FRICTION (Ref # 13088A)	13088-0041	1
PLATE-FRICTION,ID=100 (Ref # 13088B)	13088-1077	1
PLATE-CLUTCH (Ref # 13089)	13089-1108	4
HOLDER,CLUTCH SPRING (Ref # 13091)	13091-1920	1
HOUSING-COMP-CLUTCH (Ref # 13095)	13095-0571	1
ROD-PUSH (Ref # 13116)	13116-0706	1
PLATE (Ref # 13183)	13183-1274	1
LEVER-COMP,CLUTCH RELEASE (Ref # 13236)	13236-0174	1
BEARING-BALL (Ref # 601)	601A6000	1
SPACER (Ref # 92026)	92026-0853	2
BUSHING,17X22X30 (Ref # 92139)	92139-0871	1
SPRING,CLUTCH (Ref # 92144)	92144-1289	1
SPRING (Ref # 92145)	92145-0861	4
BOLT,6X25 (Ref # 92153)	92153-1067	4
BOLT,FLANGED,10X36 (Ref # 92154)	92154-1056	1

© 2026 Kawasaki Motors Corp., U.S.A.