2020 KLX®300R

PARTS DIAGRAM

Decals

F2861

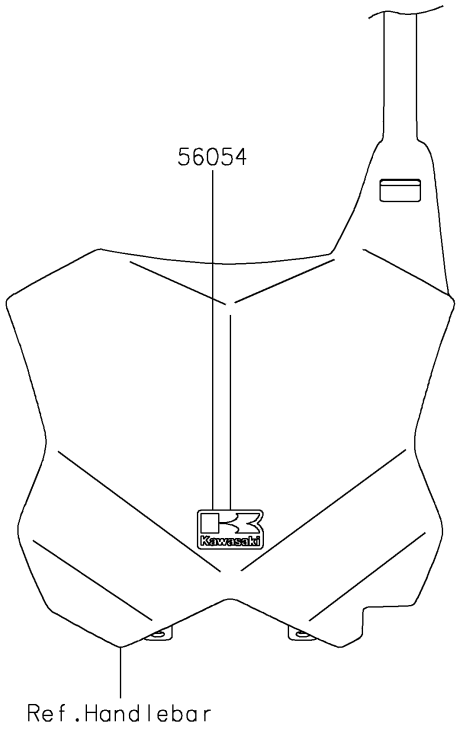

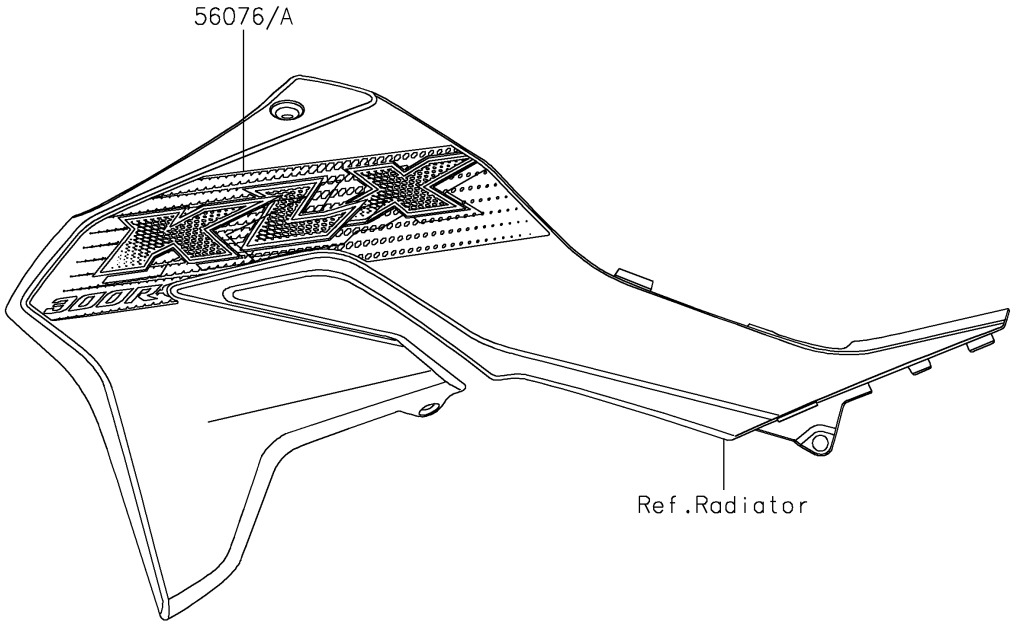

© 2026 Kawasaki Motors Corp., U.S.A.

2020 KLX®300R

PARTS LIST

Decals

ITEM NAME	PART NUMBER	QUANTITY
MARK,NUMBER PLATE,K (Ref # 56054)	56054-2249	1
PATTERN,SHROUD,LH (Ref # 56076)	56076-0195	1
PATTERN,SHROUD,RH (Ref # 56076A)	56076-0196	1

© 2026 Kawasaki Motors Corp., U.S.A.