2020 KLX®300R

PARTS DIAGRAM

Reflectors(CN)

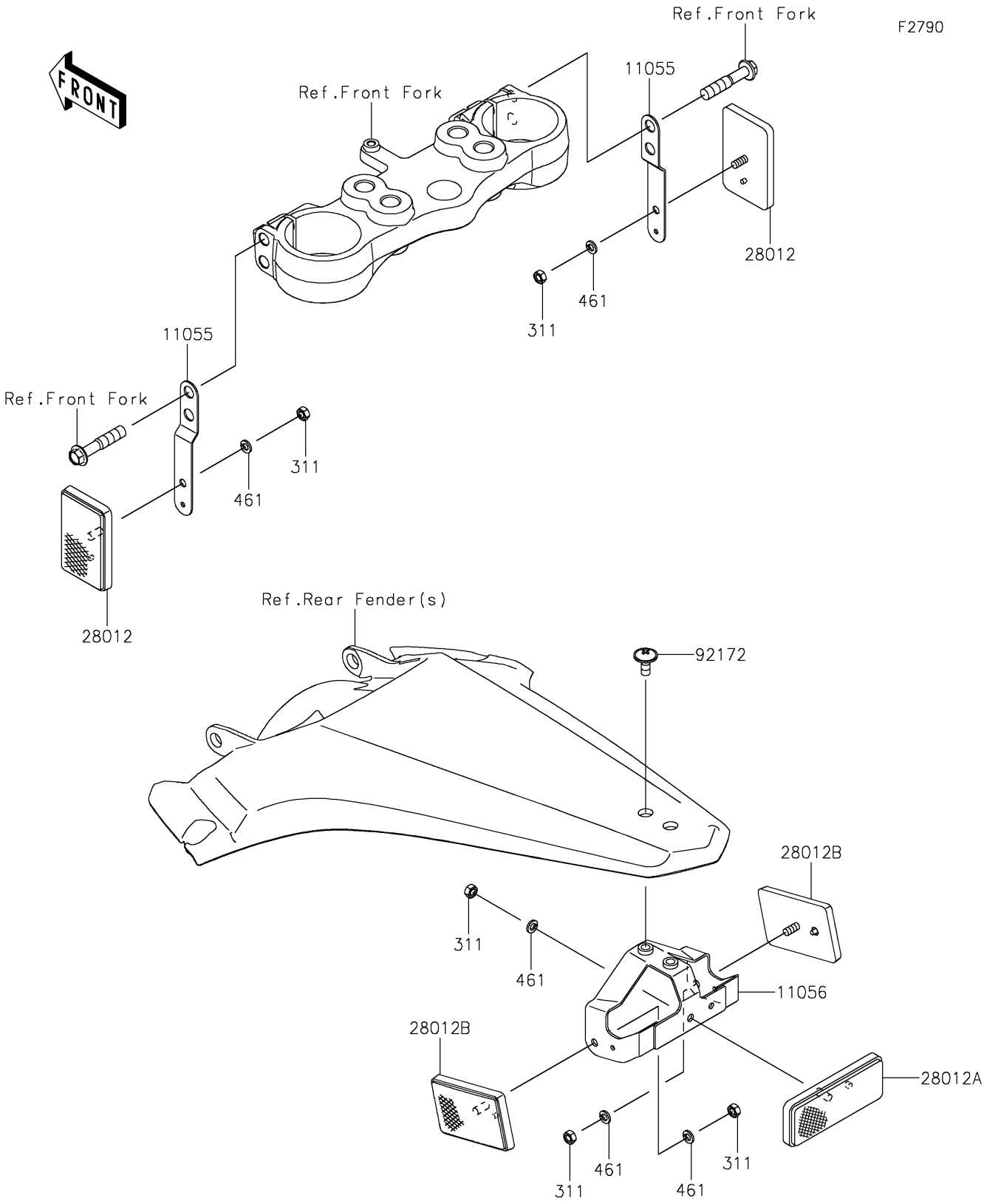

© 2026 Kawasaki Motors Corp., U.S.A.

2020 KLX®300R

PARTS LIST

Reflectors(CN)

ITEM NAME	PART NUMBER	QUANTITY
BRACKET,REFLECTOR,FR (Ref # 11055)	11055-0080	2
BRACKET,REFLECTOR,RR (Ref # 11056)	11056-0111	1
REFLECTOR-REFLEX (Ref # 28012)	28012-1003	2
REFLECTOR-REFLEX (Ref # 28012A)	28012-1077	1
REFLECTOR-REFLEX (Ref # 28012B)	28012-1088	2
NUT-HEX (Ref # 311)	311BA0500	5
WASHER-SPRING,5MM (Ref # 461)	461DA0500	5
SCREW,6X14 (Ref # 92172)	92172-0401	2

© 2026 Kawasaki Motors Corp., U.S.A.