2020 KLX®300R

PARTS DIAGRAM

Side Covers

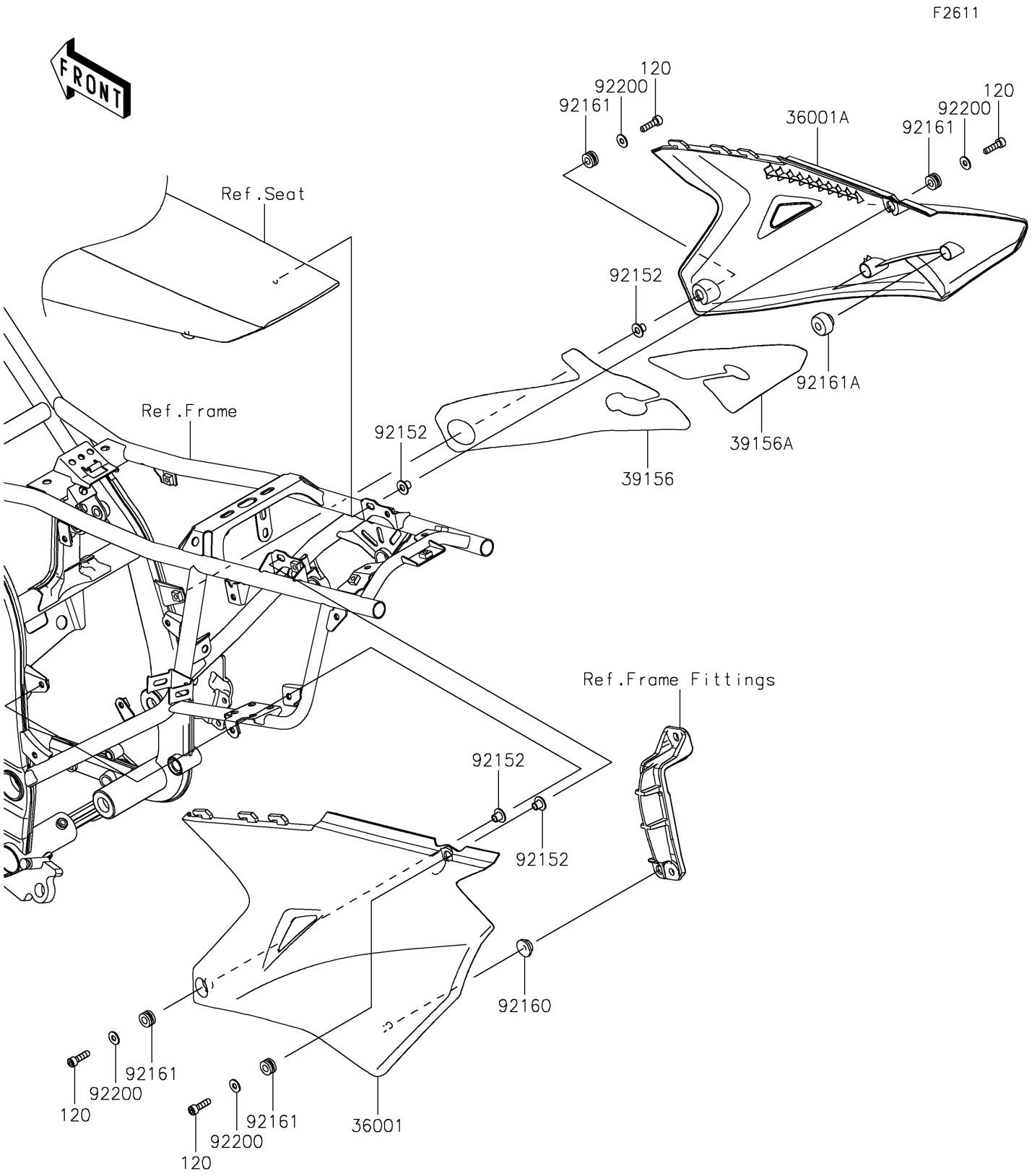

© 2026 Kawasaki Motors Corp., U.S.A.

2020 KLX®300R

PARTS LIST

Side Covers

ITEM NAME	PART NUMBER	QUANTITY
BOLT-SOCKET,6X25 (Ref # 120)	120CC0625	4
COVER-SIDE,LH,B.WHITE (Ref # 36001)	36001-0682-266	1
COVER-SIDE,RH,B.WHITE (Ref # 36001A)	36001-0683-266	1
PAD,COVER-SIDE,RH,FR (Ref # 39156)	39156-2458	1
PAD,COVER-SIDE,RH,RR (Ref # 39156A)	39156-2459	1
COLLAR,6.3X8.3X9.2 (Ref # 92152)	92152-1671	4
DAMPER (Ref # 92160)	92160-1613	1
DAMPER,8X16X8.6 (Ref # 92161)	92161-0685	4
DAMPER (Ref # 92161A)	92161-1783	2
WASHER,6.2X15X1.2 (Ref # 92200)	92200-1762	4

© 2026 Kawasaki Motors Corp., U.S.A.