2020 KLX®300R

PARTS DIAGRAM

Handlebar

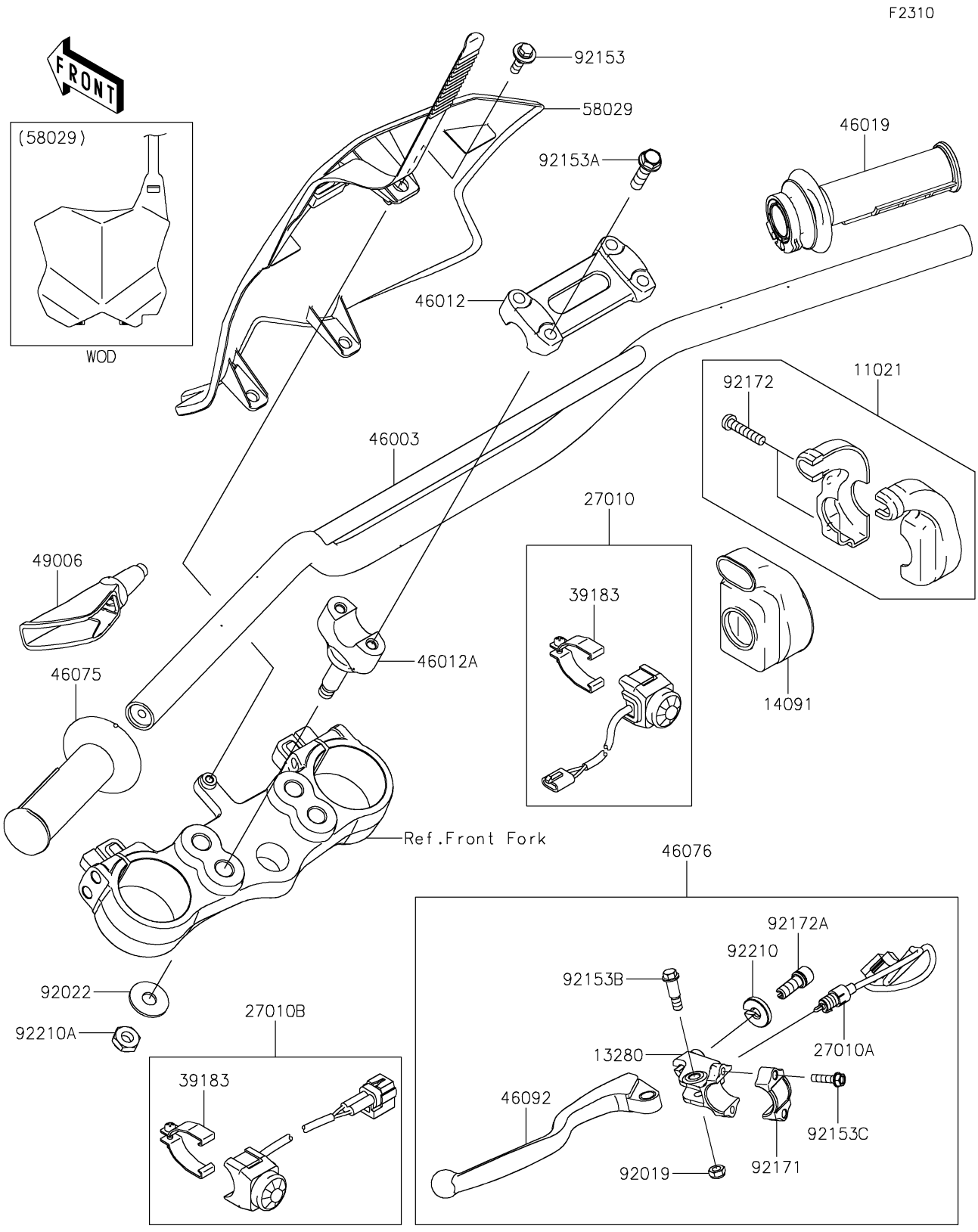

© 2026 Kawasaki Motors Corp., U.S.A.

2020 KLX®300R

PARTS LIST

Handlebar

ITEM NAME	PART NUMBER	QUANTITY
CASE-ASSY,THROTTLE (Ref # 11021)	11021-0035	1
HOLDER,CLUTCH LEVER (Ref # 13280)	13280-0256	1
COVER,THROTTLE CASE (Ref # 14091)	14091-0182	1
SWITCH,ENGINE START (Ref # 27010)	27010-0069	1
SWITCH,CLUTCH (Ref # 27010A)	27010-0071	1
SWITCH,ENGINE STOP (Ref # 27010B)	27010-0826	1
BAND-ASSY,SWITCH (Ref # 39183)	39183-1059	2
HANDLE,P.SILVER (Ref # 46003)	46003-0737-458	1
HOLDER-HANDLE,UPP,F.S.BLACK (Ref # 46012)	46012-0010-18R	1
HOLDER-HANDLE,LWR,F.S.BLACK (Ref # 46012A)	46012-0412-18R	2
GRIP-ASSY,THROTTLE (Ref # 46019)	46019-0041	1
GRIP,LH (Ref # 46075)	46075-0072	1
LEVER-ASSY-GRIP,CLUTCH (Ref # 46076)	46076-0049	1
LEVER-GRIP,CLUTCH (Ref # 46092)	46092-0026	1
BOOT,LEVER HOLDER (Ref # 49006)	49006-0080	1
PLATE-NUMBER,B.WHITE (Ref # 58029)	58029-0013-266	1
NUT,LOCK,6MM (Ref # 92019)	92019-008	1
WASHER,10.2X28X2 (Ref # 92022)	92022-1088	2
BOLT,FLANGED,6X22 (Ref # 92153)	92153-0950	1
BOLT,FLANGED,8X30 (Ref # 92153A)	92153-1519	4
BOLT,6MM (Ref # 92153B)	92153-1897	1
BOLT,5X20 (Ref # 92153C)	92153-1898	2
CLAMP,LEVER HOLDER (Ref # 92171)	92171-1671	1
SCREW,5X20 (Ref # 92172)	92172-0069	2
SCREW,CABLE ADJUST,8MM (Ref # 92172A)	92172-0330	1
NUT,CABLE ADJUST (Ref # 92210)	92210-0411	1
NUT,LOCK,10MM (Ref # 92210A)	92210-1184	2

© 2026 Kawasaki Motors Corp., U.S.A.