2020 KLX®300R

PARTS DIAGRAM

Rear Fender(s)

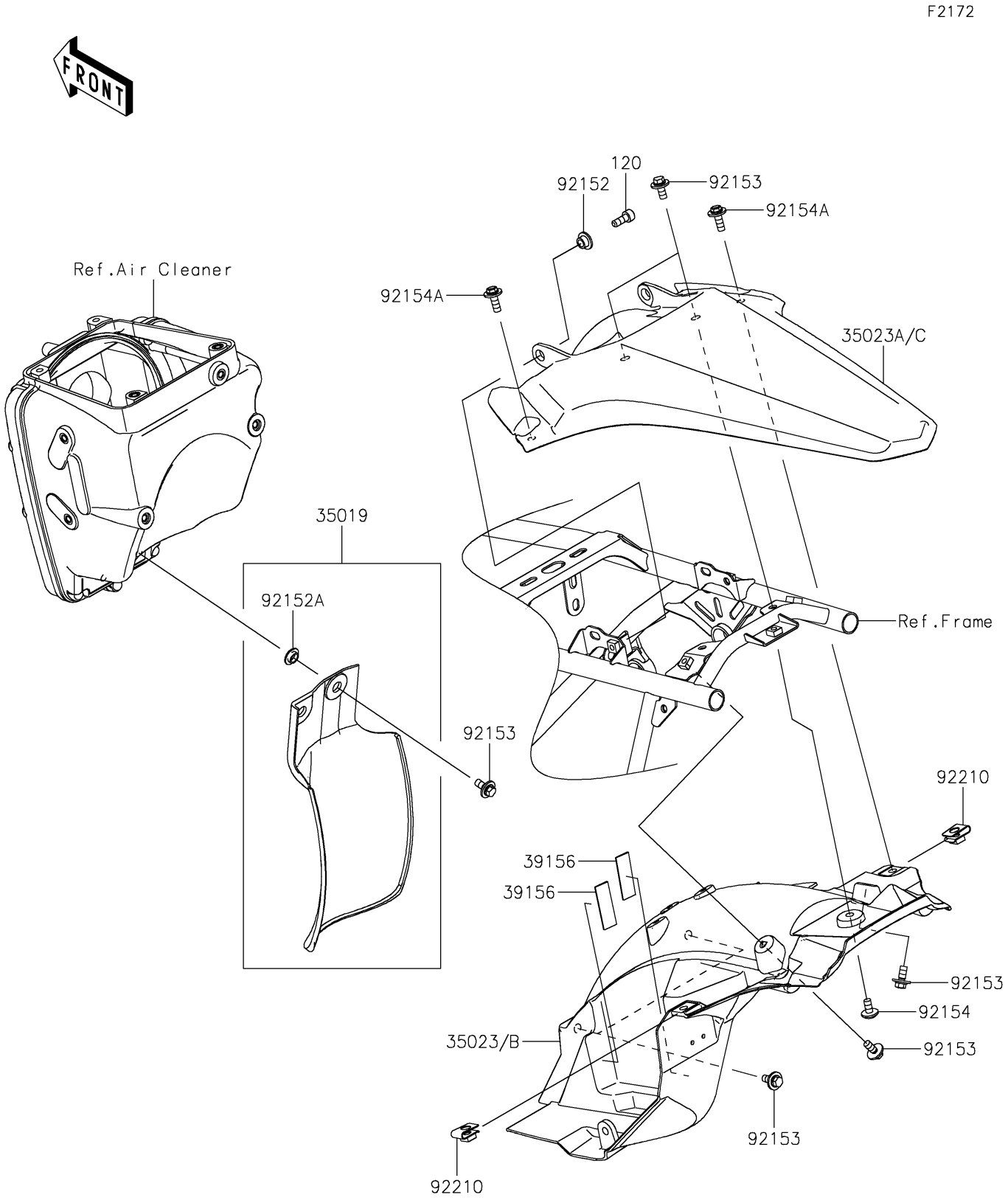

© 2026 Kawasaki Motors Corp., U.S.A.

2020 KLX®300R

PARTS LIST

Rear Fender(s)

ITEM NAME	PART NUMBER	QUANTITY
BOLT-SOCKET,6X16 (Ref # 120)	120CA0616	2
FLAP,RR FENDER,FR (Ref # 35019)	35019-0004	1
FENDER-REAR (Ref # 35023)	35023-0456	1
FENDER-REAR,L.GREEN (Ref # 35023A)	35023-0457-290	1
FENDER-REAR (Ref # 35023B)	35023-0461	1
FENDER-REAR,L.GREEN (Ref # 35023C)	35023-0470-290	1
PAD,15X40X1 (Ref # 39156)	39156-2548	2
COLLAR,6.8X10(16)X6.6 (Ref # 92152)	92152-0842	2
COLLAR,8.8X11.2X4 (Ref # 92152A)	92152-0909	2
BOLT,FLANGED,6X14 (Ref # 92153)	92153-0936	8
BOLT,SOCKET,6X12 (Ref # 92154)	92154-2355	1
BOLT,FLANGED,6X18 (Ref # 92154A)	92154-3994	2
NUT (Ref # 92210)	92210-0130	2

© 2026 Kawasaki Motors Corp., U.S.A.