2020 KLX®300R

PARTS DIAGRAM

Generator

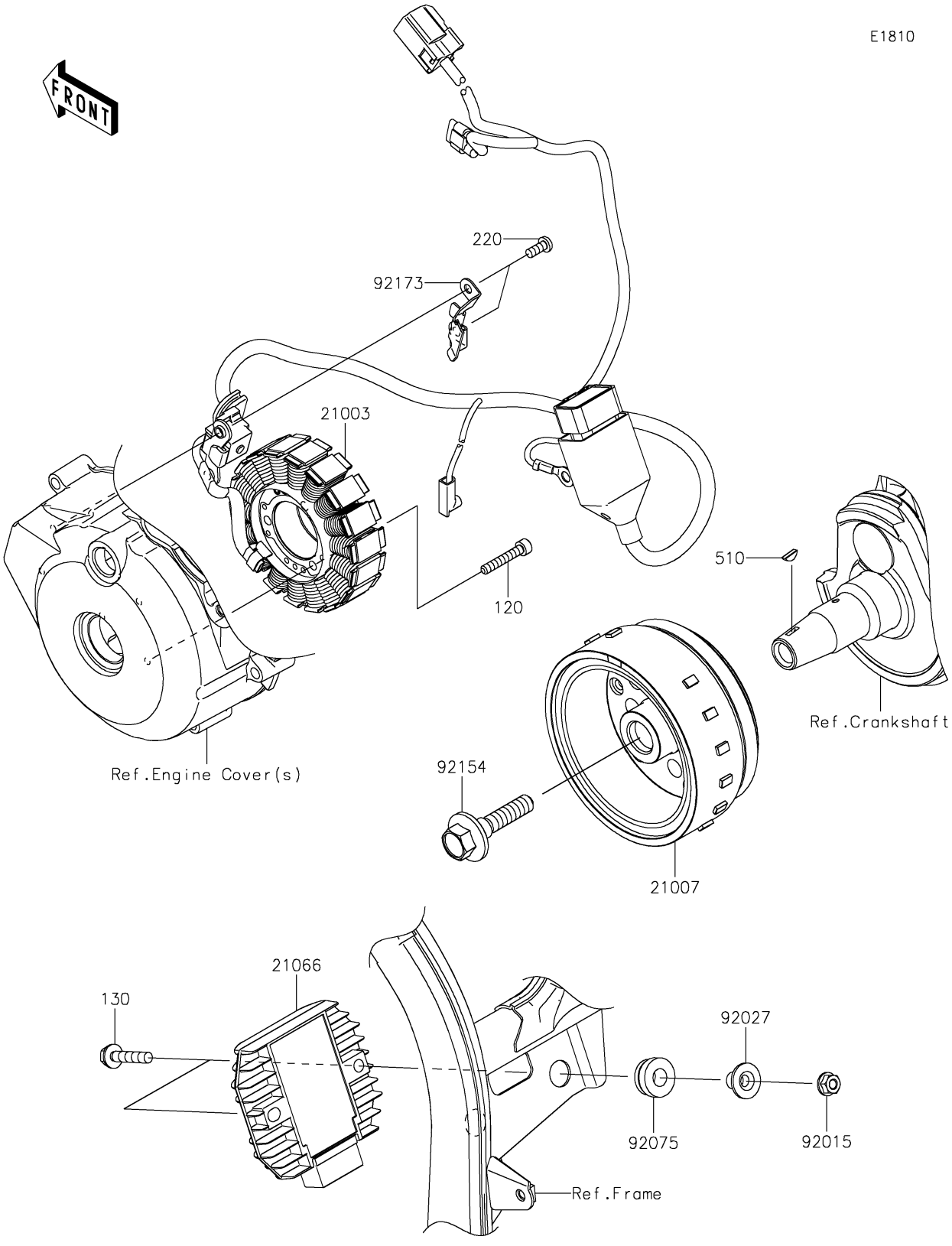

© 2026 Kawasaki Motors Corp., U.S.A.

2020 KLX®300R

PARTS LIST

Generator

ITEM NAME	PART NUMBER	QUANTITY
BOLT-SOCKET,5X30 (Ref # 120)	120CA0530	3
BOLT-FLANGED,6X30 (Ref # 130)	130BA0630	2
STATOR (Ref # 21003)	21003-0187	1
ROTOR (Ref # 21007)	21007-0678	1
REGULATOR-VOLTAGE (Ref # 21066)	21066-0724	1
SCREW-PAN-CROS,5X12 (Ref # 220)	220AA0512	2
KEY-WOODRUFF (Ref # 510)	510A3100	1
NUT,FLANGED,6MM,BLACK (Ref # 92015)	92015-1233	2
COLLAR,FLANGED,L=12.1,BLACK (Ref # 92027)	92027-1651	2
DAMPER (Ref # 92075)	92075-277	2
BOLT (Ref # 92154)	92154-1309	1
CLAMP (Ref # 92173)	92173-1150	1

© 2026 Kawasaki Motors Corp., U.S.A.