2020 KLX®300R

PARTS DIAGRAM

Fuel Injection

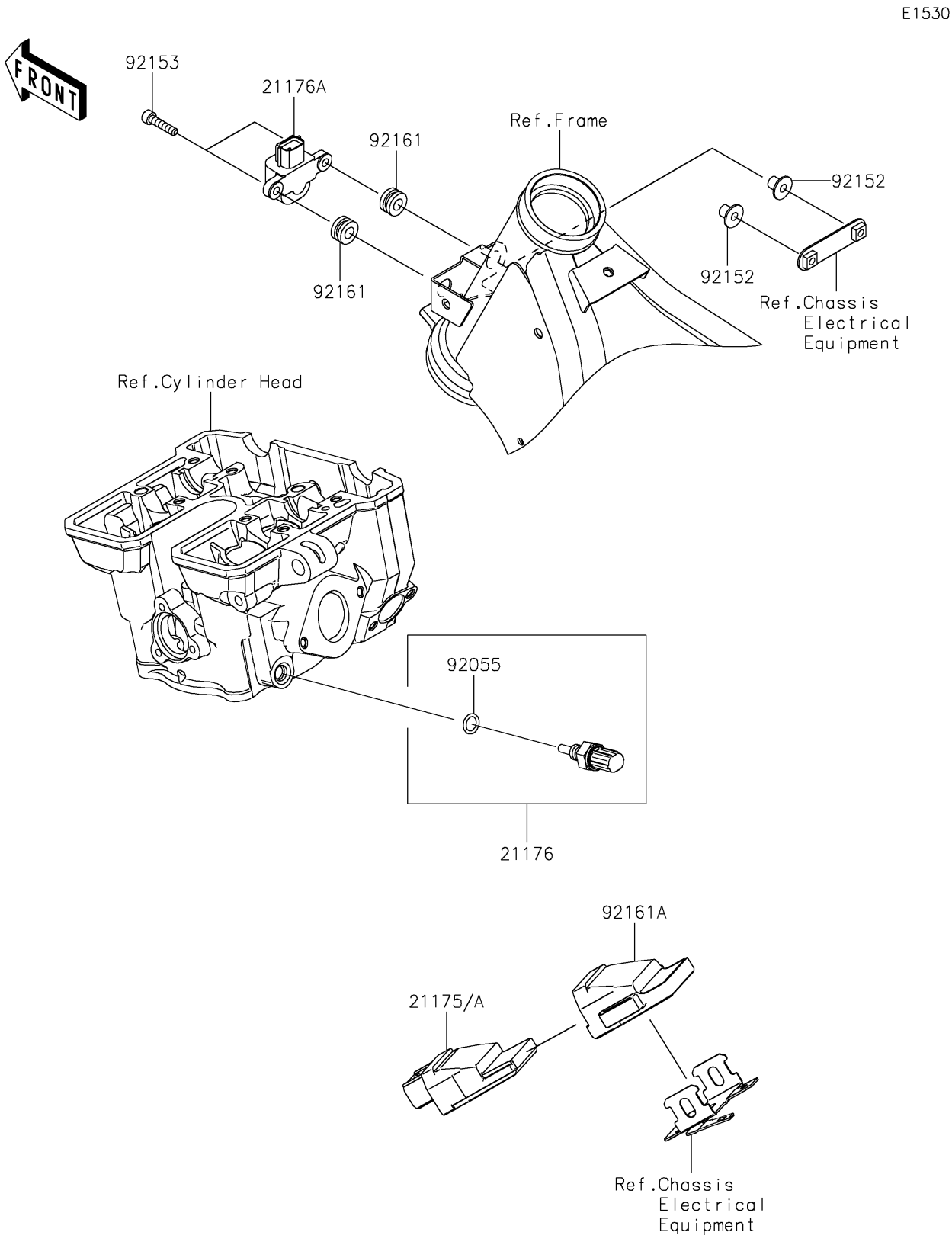

© 2026 Kawasaki Motors Corp., U.S.A.

2020 KLX®300R

PARTS LIST

Fuel Injection

ITEM NAME	PART NUMBER	QUANTITY
CONTROL UNIT-ELECTRONIC (Ref # 21175)	21175-1503	1
CONTROL UNIT-ELECTRONIC (Ref # 21175A)	21175-1531	1
SENSOR,WATER TEMP (Ref # 21176)	21176-0009	1
SENSOR,VEHICLE-DOWN (Ref # 21176A)	21176-0026	1
RING-O,9.5X1.9 (Ref # 92055)	92055-0016	1
COLLAR (Ref # 92152)	92152-1592	2
BOLT,SOCKET,5X22 (Ref # 92153)	92153-1597	2
DAMPER,8X16X8.6 (Ref # 92161)	92161-0685	2
DAMPER,ECU (Ref # 92161A)	92161-2200	1

© 2026 Kawasaki Motors Corp., U.S.A.