2020 KLX®300R

PARTS DIAGRAM

Fuel Pump

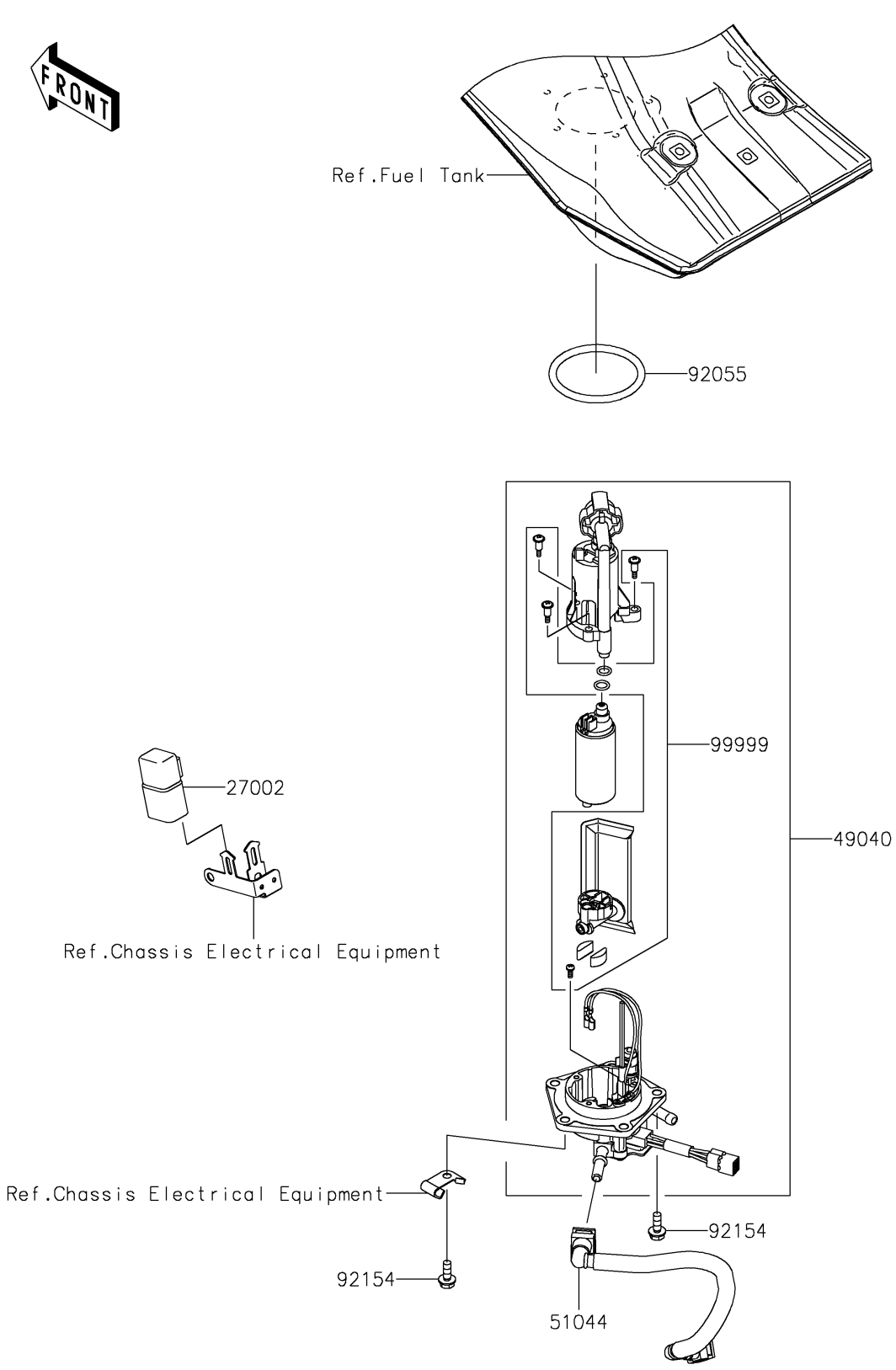

© 2026 Kawasaki Motors Corp., U.S.A.

2020 KLX®300R

PARTS LIST

Fuel Pump

ITEM NAME	PART NUMBER	QUANTITY
RELAY-ASSY (Ref # 27002)	27002-1086	1
PUMP-FUEL (Ref # 49040)	49040-0767	1
TUBE-ASSY,FUEL (Ref # 51044)	51044-0912	1
RING-O,64.6X5.7 (Ref # 92055)	92055-0185	1
BOLT,FLANGED,6X16 (Ref # 92154)	92154-0899	5
KIT.,FUEL FILTER (Ref # 99999)	99999-0535	1

© 2026 Kawasaki Motors Corp., U.S.A.