2009 KLR™650

PARTS DIAGRAM

Clutch

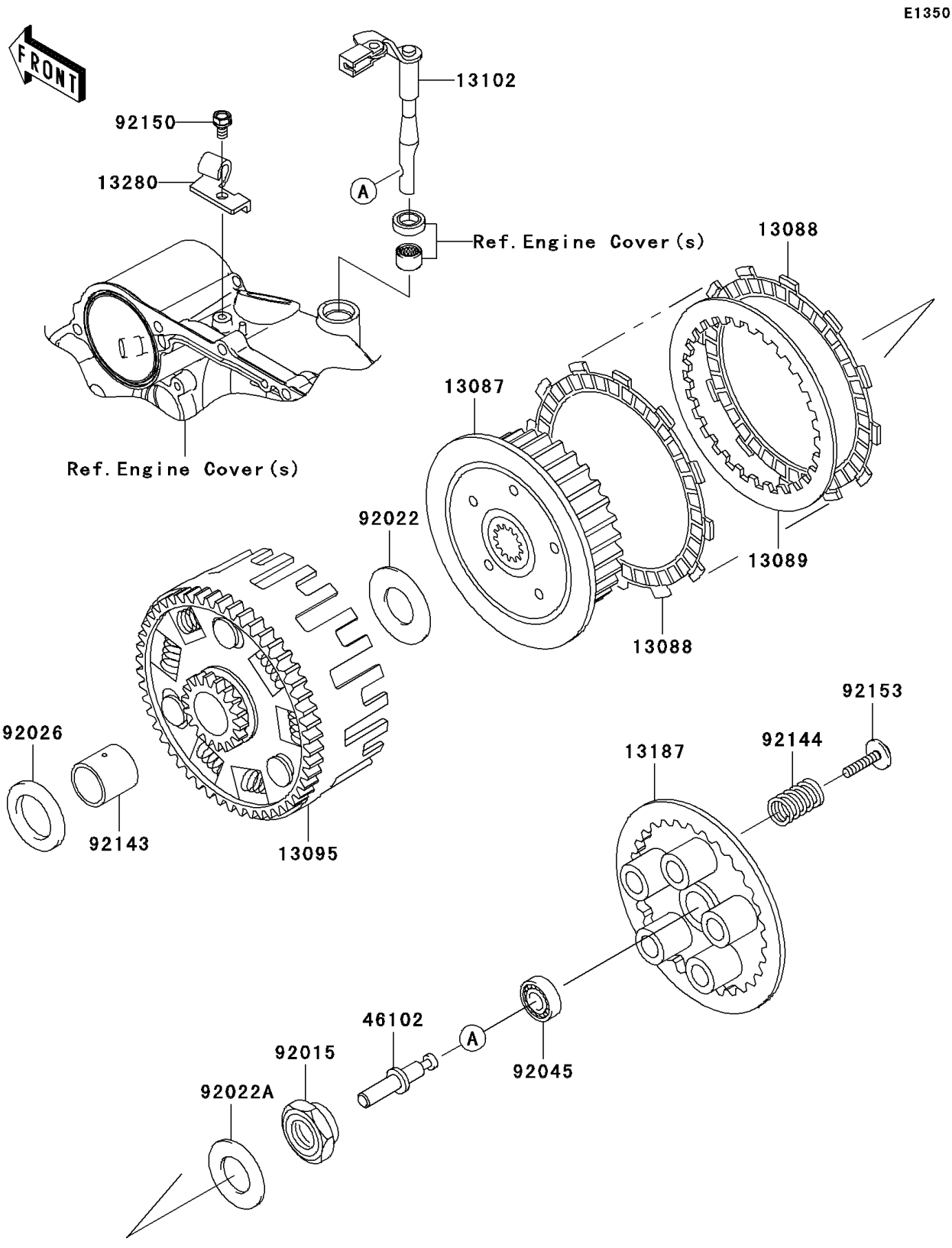

© 2026 Kawasaki Motors Corp., U.S.A.

2009 KLR™650

PARTS LIST

Clutch

ITEM NAME	PART NUMBER	QUANTITY
HUB-CLUTCH (Ref # 13087)	13087-0023	1
PLATE-FRICTION (Ref # 13088)	13088-040	8
PLATE-CLUTCH,T=2.0 (Ref # 13089)	13089-1068	7
HOUSING-COMP-CLUTCH (Ref # 13095)	13095-1311	1
RELEASE-COMP-CLUTCH (Ref # 13102)	13102-0033	1
PLATE-CLUTCH OPERATING (Ref # 13187)	13187-1080	1
HOLDER,CLUTCH CABLE (Ref # 13280)	13280-0276	1
ROD,CLUTCH (Ref # 46102)	46102-1030	1
NUT,20MM (Ref # 92015)	92015-1555	1
WASHER,25.5X52.6X2 (Ref # 92022)	92022-1476	1
WASHER,20.3X36X3.7 (Ref # 92022A)	92022-1868	1
SPACER,25.1X38X4 (Ref # 92026)	92026-1206	1
BEARING-BALL (Ref # 92045)	92045-1408	1
COLLAR (Ref # 92143)	92143-1769	1
SPRING,CLUTCH (Ref # 92144)	92144-1559	5
BOLT,6X12 (Ref # 92150)	92150-1965	1
BOLT,6X30 (Ref # 92153)	92153-0643	5

© 2026 Kawasaki Motors Corp., U.S.A.