1991 KX125

PARTS DIAGRAM

Side Cover

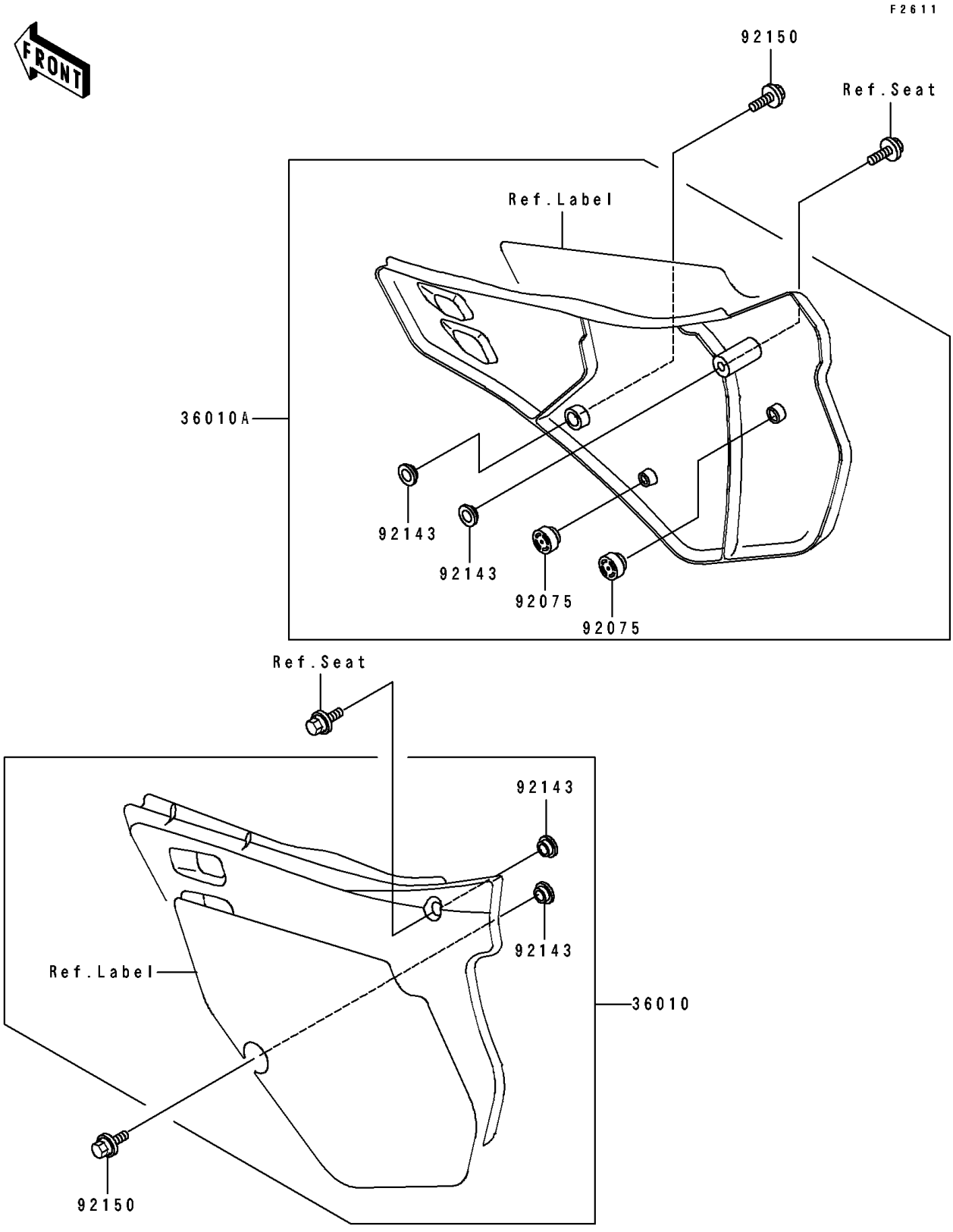

© 2026 Kawasaki Motors Corp., U.S.A.

1991 KX125

PARTS LIST

Side Cover

ITEM NAME	PART NUMBER	QUANTITY
COVER-SIDE,LH,L.GREEN (Ref # 36010)	36010-5289-6W	1
COVER-SIDE,RH,L.GREEN (Ref # 36010A)	36010-5290-6W	1
DAMPER (Ref # 92075)	92075-1598	2
COLLAR (Ref # 92143)	92143-1196	4
BOLT,6X20 (Ref # 92150)	92150-1339	2

© 2026 Kawasaki Motors Corp., U.S.A.