1991 KX125

PARTS DIAGRAM

Brake Pedal

F2260

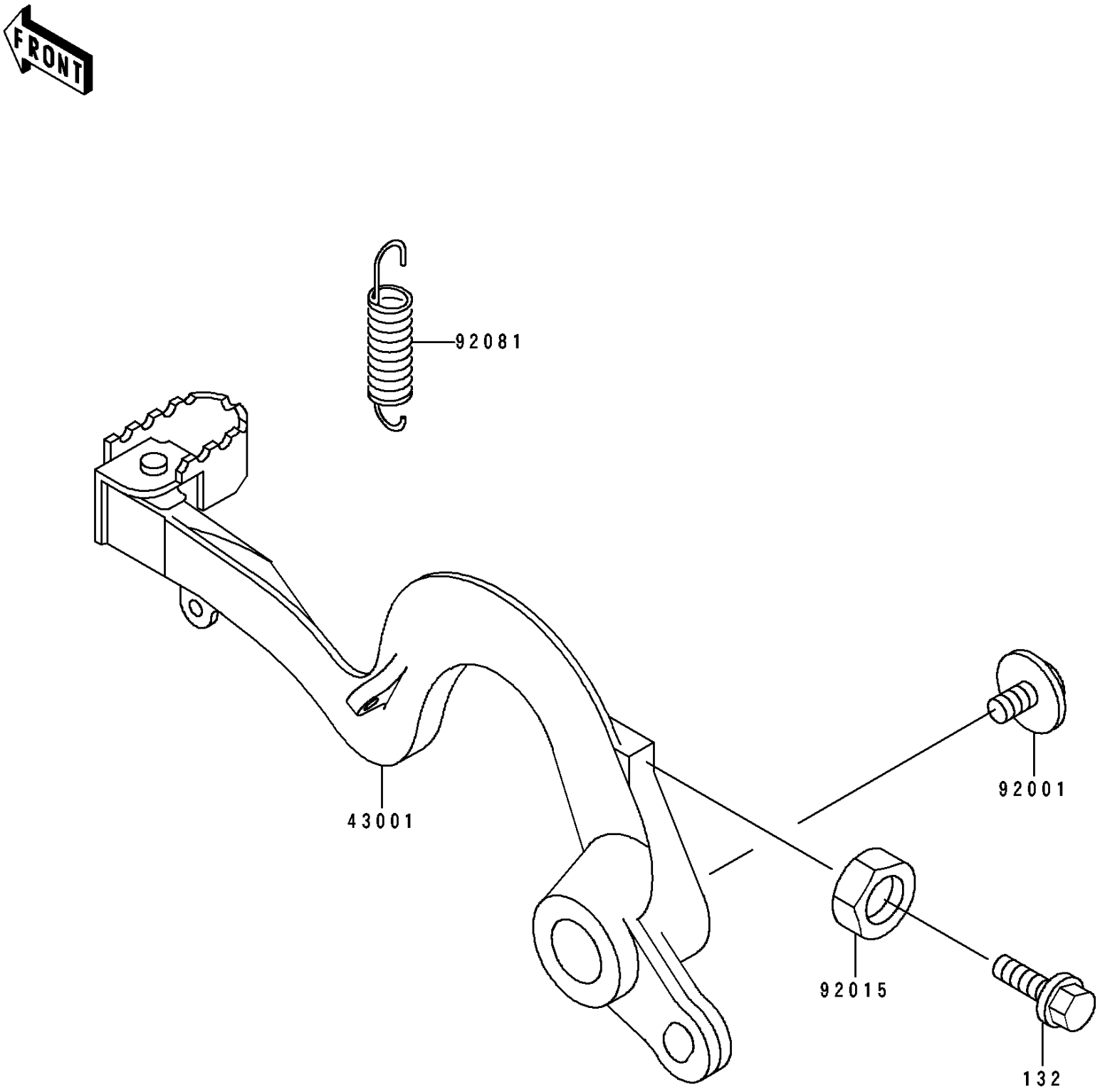

© 2026 Kawasaki Motors Corp., U.S.A.

1991 KX125

PARTS LIST

Brake Pedal

ITEM NAME	PART NUMBER	QUANTITY
LEVER-BRAKE,PEDAL (Ref # 43001)	43001-1277	1
BOLT,FLANGED,6X10 (Ref # 92001)	92001-1034	1
NUT,6MM (Ref # 92015)	92015-1391	1
SPRING,BRAKE PEDAL RETURN (Ref # 92081)	92081-1932	1
BOLT-FLANGED-SMALL (Ref # 132)	132G0616	1

© 2026 Kawasaki Motors Corp., U.S.A.