2005 KX100

PARTS DIAGRAM

Side Covers

F2611

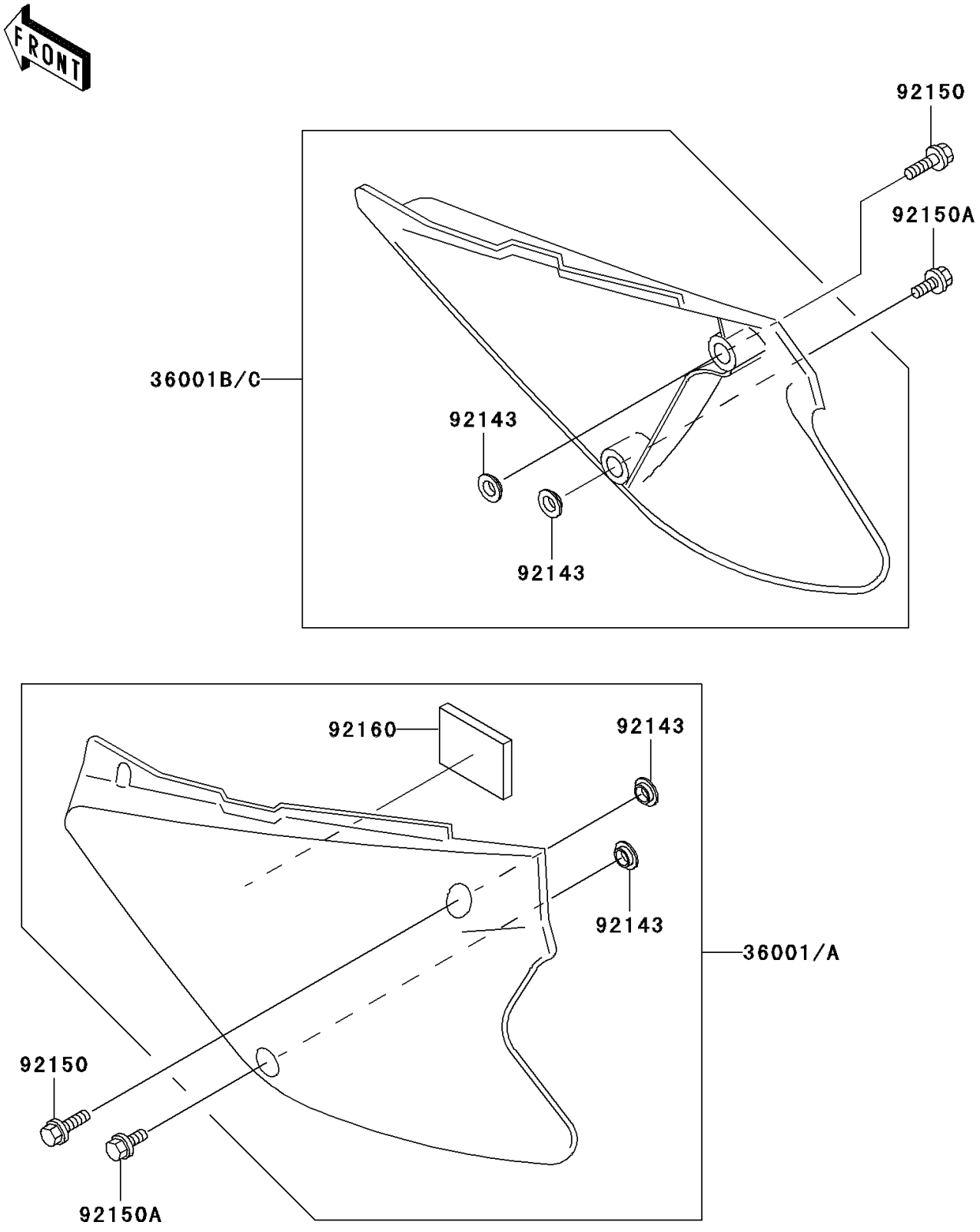

© 2026 Kawasaki Motors Corp., U.S.A.

2005 KX100

PARTS LIST

Side Covers

ITEM NAME	PART NUMBER	QUANTITY
COVER-SIDE,LH,S.WHITE (Ref # 36001)	36001-1584-266	1
COVER-SIDE,RH,S.WHITE (Ref # 36001B)	36001-1585-266	1
COLLAR (Ref # 92143)	92143-1196	4
BOLT,6X20 (Ref # 92150)	92150-1339	2
BOLT,6X14 (Ref # 92150A)	92150-1340	2
DAMPER (Ref # 92160)	92160-1899	1

© 2026 Kawasaki Motors Corp., U.S.A.