2005 KX100

PARTS DIAGRAM

Fuel Tank

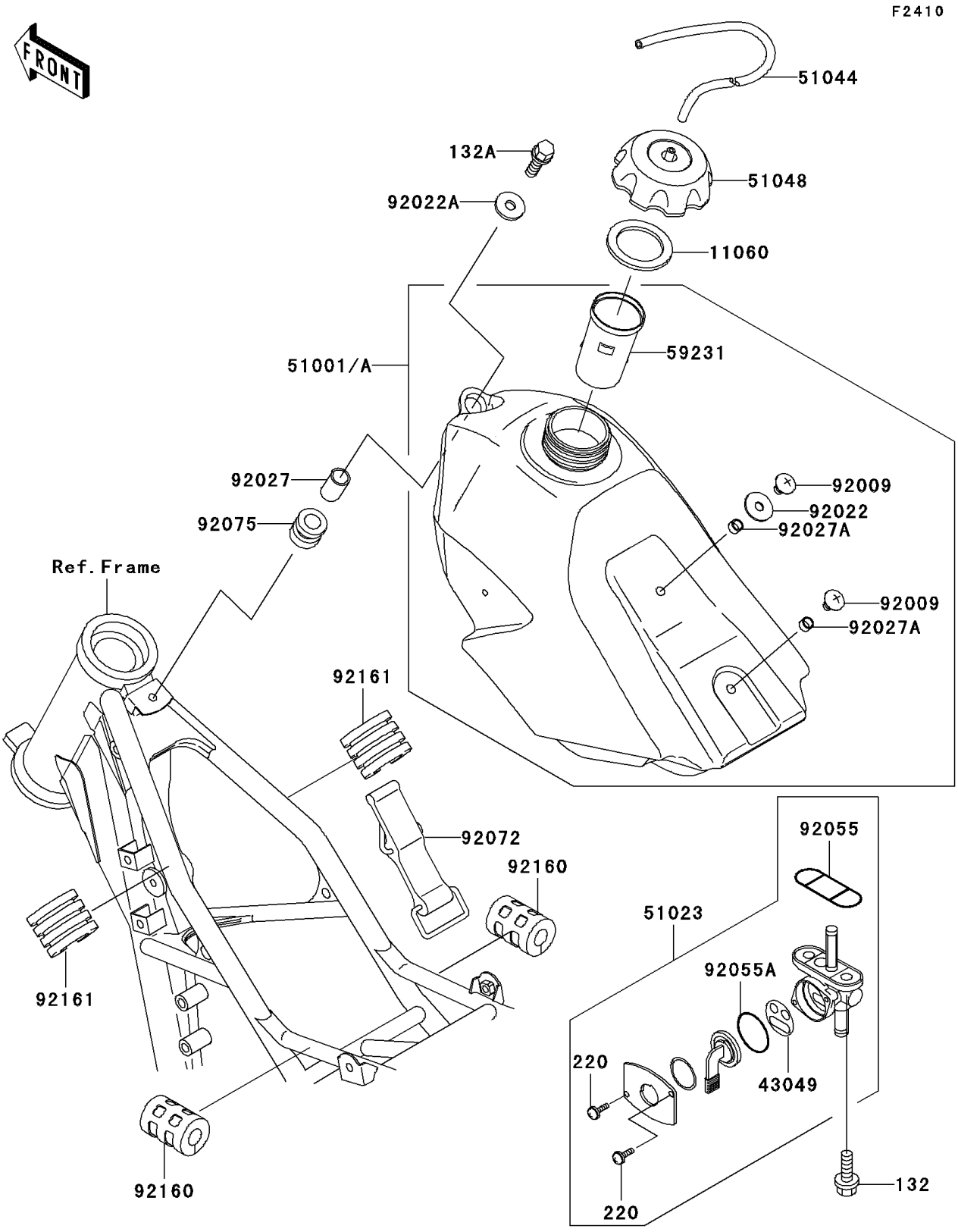

© 2026 Kawasaki Motors Corp., U.S.A.

2005 KX100

PARTS LIST

Fuel Tank

ITEM NAME	PART NUMBER	QUANTITY
BOLT-FLANGED-SMALL (Ref # 132)	132G0612	2
BOLT-FLANGED-SMALL (Ref # 132A)	132G0625	1
SCREW-PAN-CROS (Ref # 220)	220B0308	2
GASKET,FUEL TANK CAP (Ref # 11060)	11060-1340	1
PACKING,TAP VALVE (Ref # 43049)	43049-1091	1
TANK-COMP-FUEL,F.BLACK (Ref # 51001A)	51001-1677-6Z	1
TAP-ASSY,FUEL (Ref # 51023)	51023-1339	1
TUBE-ASSY (Ref # 51044)	51044-1185	1
CAP-ASSY-TANK,FUEL (Ref # 51048)	51048-1124	1
FILLER (Ref # 59231)	59231-1096	1
SCREW,6X10 (Ref # 92009)	92009-1530	2
WASHER,PLAIN,6MM (Ref # 92022)	92022-165	1
WASHER,6.5X24X2 (Ref # 92022A)	92022-1690	1
COLLAR,6.8X10X14 (Ref # 92027)	92027-1966	1
COLLAR,6.2X7.8X5 (Ref # 92027A)	92027-2096	2
RING-O,FUEL TAP PACKING (Ref # 92055)	92055-1348	1
RING-O,TAP LEVER (Ref # 92055A)	92055-1419	1
BAND,FUEL TANK (Ref # 92072)	92072-1229	1
DAMPER (Ref # 92075)	92075-1787	1
DAMPER,FUEL TANK (Ref # 92160)	92160-1236	2
DAMPER,FUEL TANK (Ref # 92161)	92161-1175	2

© 2026 Kawasaki Motors Corp., U.S.A.