2004 KX100

PARTS DIAGRAM

Gear Change Mechanism

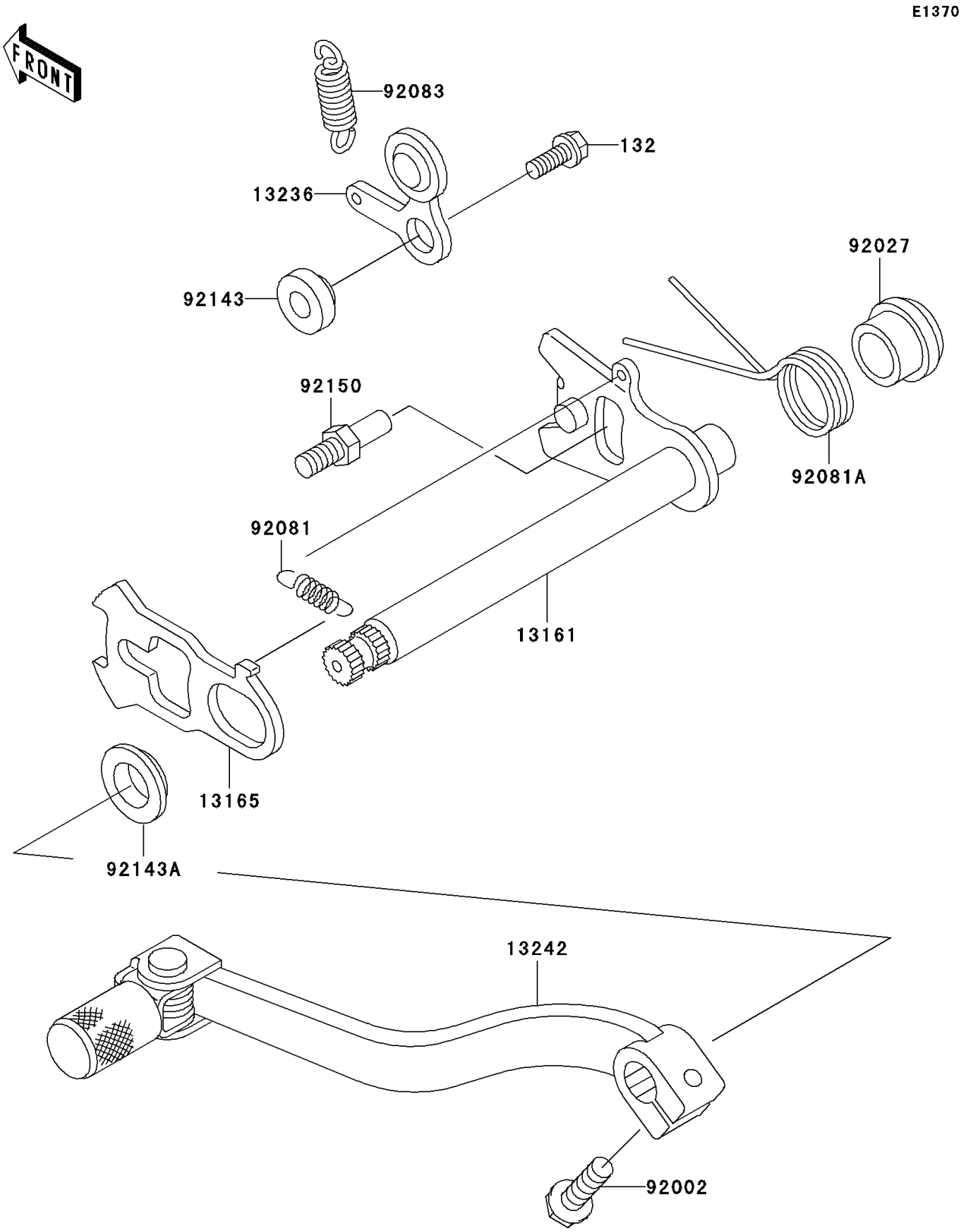

© 2026 Kawasaki Motors Corp., U.S.A.

2004 KX100

PARTS LIST

Gear Change Mechanism

ITEM NAME	PART NUMBER	QUANTITY
BOLT-FLANGED-SMALL (Ref # 132)	132G0616	1
LEVER-COMP-CHANGE SHAFT (Ref # 13161)	13161-1126	1
PAWL,CHANGE LEVER (Ref # 13165)	13165-1114	1
LEVER-COMP,POSITION (Ref # 13236)	13236-1152	1
LEVER-ASSY-CHANGE,PEDAL (Ref # 13242)	13242-1286	1
BOLT,6X20 (Ref # 92002)	92002-1237	1
COLLAR (Ref # 92027)	92027-1940	1
SPRING,CHANGE LEVER (Ref # 92081)	92081-076	1
SPRING,CHANGE SHAFT RETURN (Ref # 92081A)	92081-1716	1
SPRING,CHANGE DRUM LEVER (Ref # 92083)	92083-012	1
COLLAR (Ref # 92143)	92143-1055	1
COLLAR (Ref # 92143A)	92143-1995	1
BOLT,RETURN SPRING (Ref # 92150)	92150-1467	1

© 2026 Kawasaki Motors Corp., U.S.A.