2004 KX100

PARTS DIAGRAM

Kickstarter Mechanism

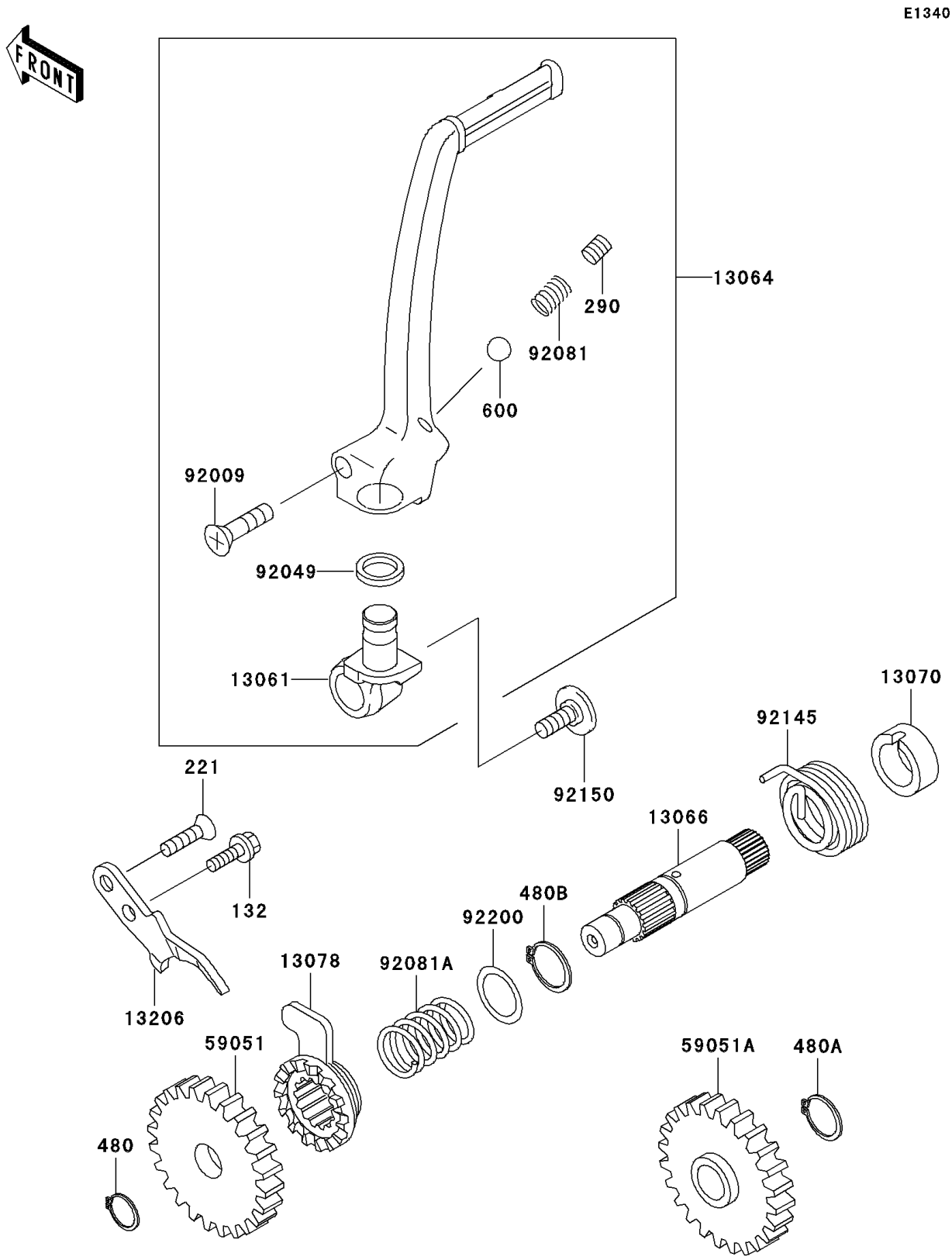

© 2026 Kawasaki Motors Corp., U.S.A.

2004 KX100

PARTS LIST

Kickstarter Mechanism

ITEM NAME	PART NUMBER	QUANTITY

© 2026 Kawasaki Motors Corp., U.S.A.