2020 Ninja® 650 KRT Edition

PARTS DIAGRAM

Accessory(Pillion Seat Cover)

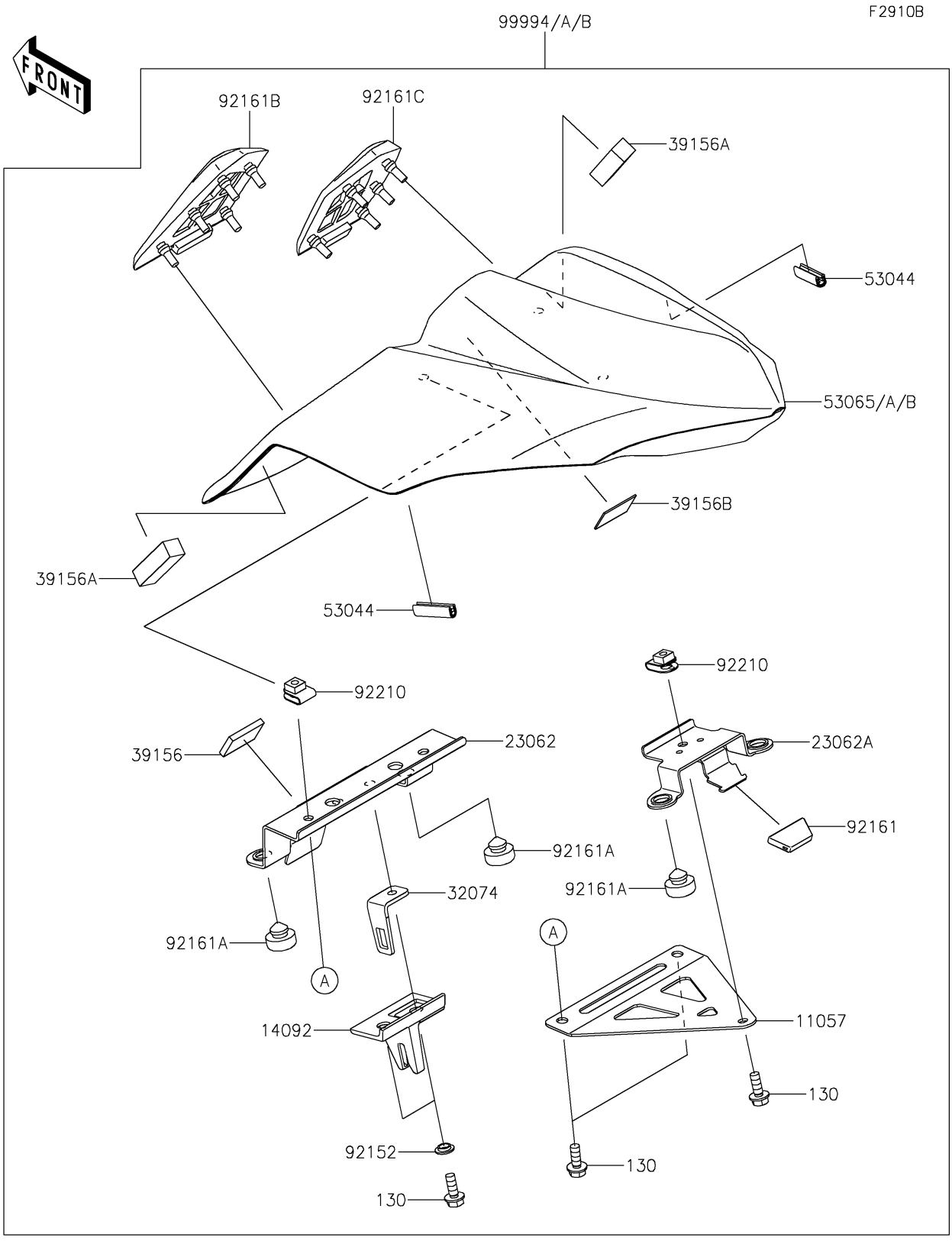

© 2026 Kawasaki Motors Corp., U.S.A.

2020 Ninja® 650 KRT Edition

PARTS LIST

Accessory(Pillion Seat Cover)

ITEM NAME	PART NUMBER	QUANTITY

© 2026 Kawasaki Motors Corp., U.S.A.