2000 KX100

PARTS DIAGRAM

Seat

F2510

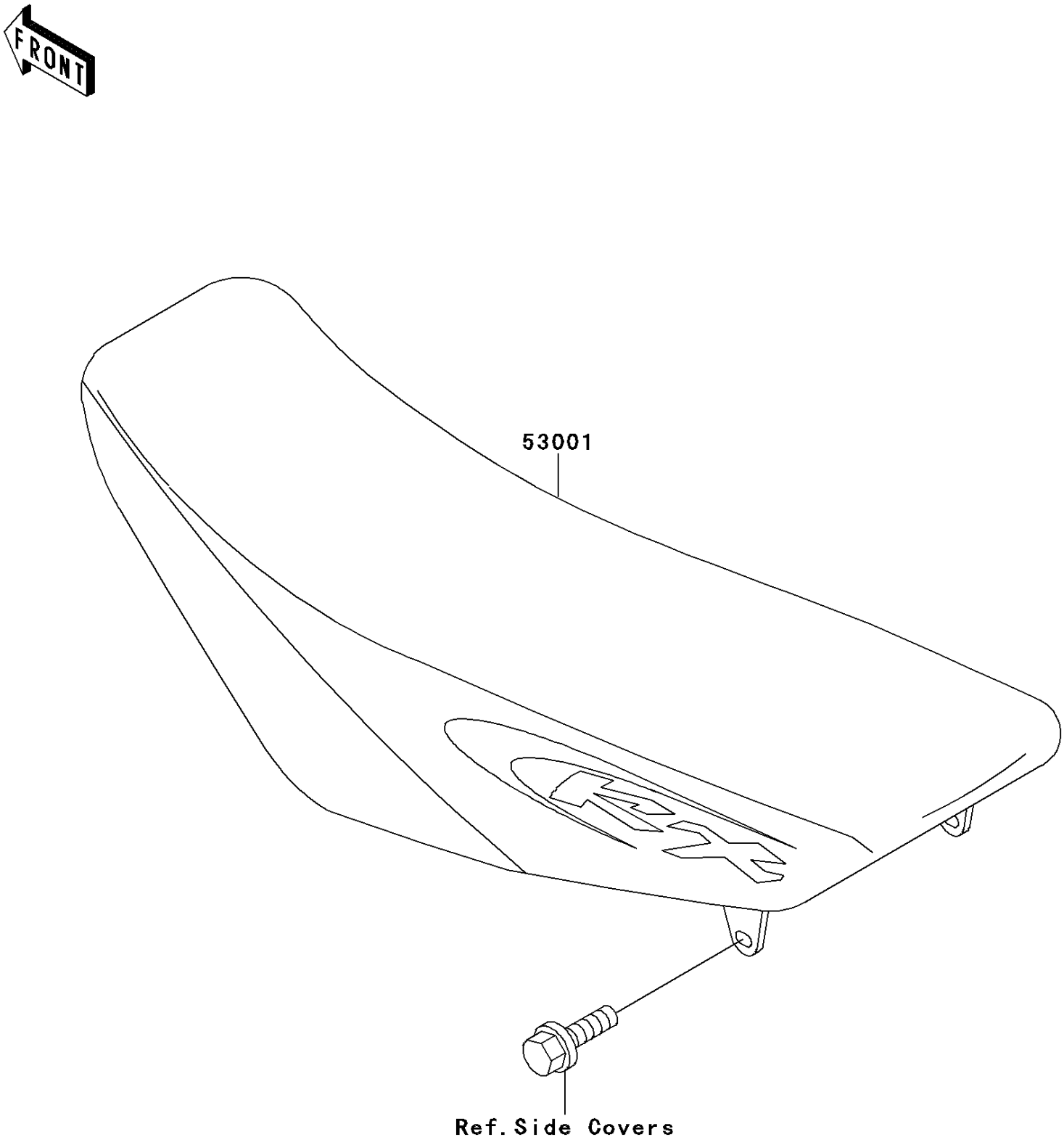

© 2026 Kawasaki Motors Corp., U.S.A.

2000 KX100

PARTS LIST

Seat

ITEM NAME	PART NUMBER	QUANTITY
SEAT-ASSY,GREEN/BLACK (Ref # 53001)	53001-1846-MH	1

© 2026 Kawasaki Motors Corp., U.S.A.