2020 Z650

PARTS DIAGRAM

Accessory(Topcase Bracket)

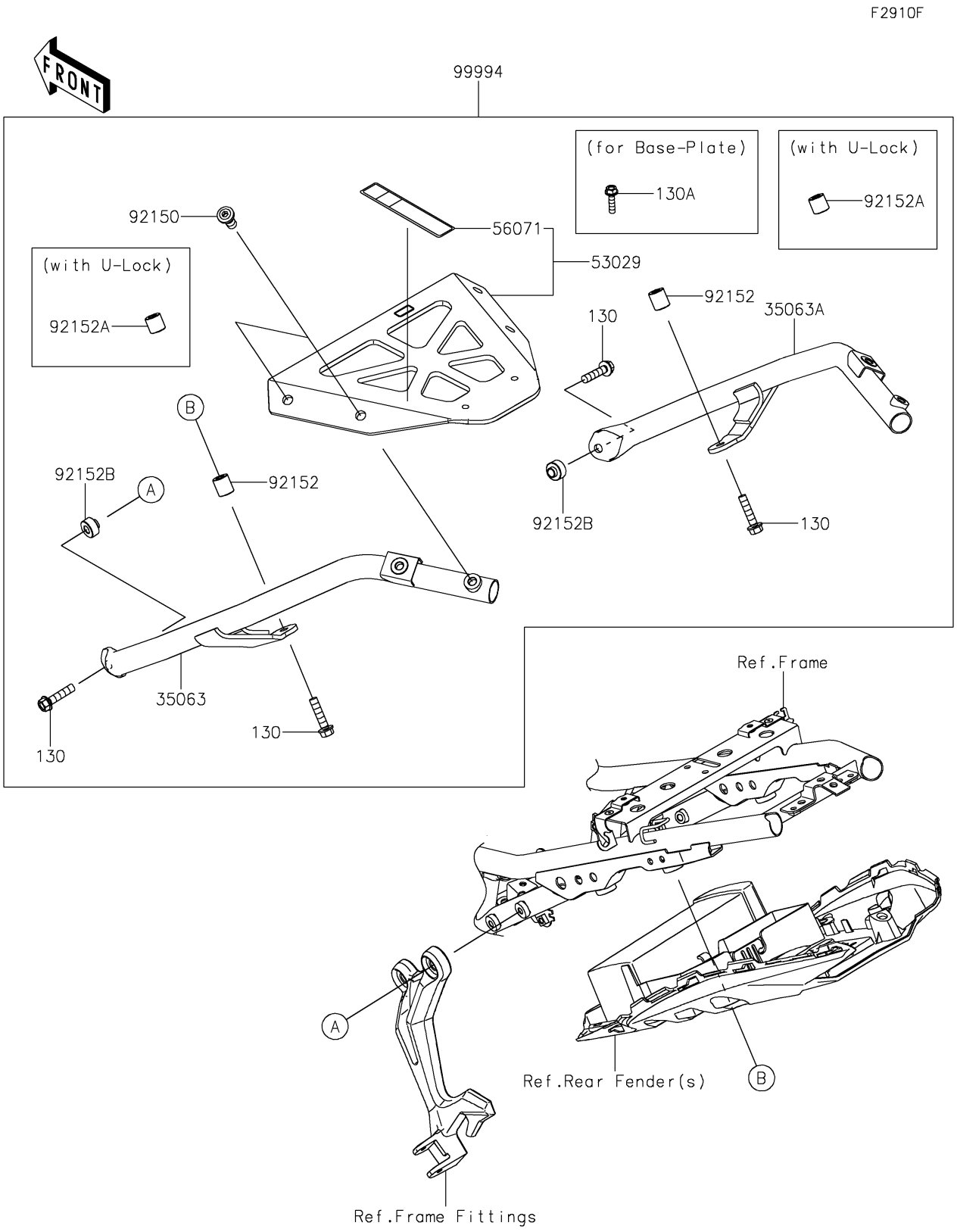

© 2026 Kawasaki Motors Corp., U.S.A.

2020 Z650

PARTS LIST

Accessory(Topcase Bracket)

ITEM NAME	PART NUMBER	QUANTITY
BOLT-FLANGED,8X35 (Ref # 130)	130CA0835	4
BOLT-FLANGED,6X25 (Ref # 130A)	130CB0625	4
STAY,LH (Ref # 35063)	35063-1353	1
STAY,RH (Ref # 35063A)	35063-1354	1
CARRIER (Ref # 53029)	53029-0353	1
LABEL-WARNING,CARRIER LOADING (Ref # 56071)	56071-0554	1
BOLT,SOCKET,10X25 (Ref # 92150)	92150-1747	4
COLLAR,8.5X17X19 (Ref # 92152)	92152-2234	2
COLLAR,8.5X17X16.7 (Ref # 92152A)	92152-2235	2
COLLAR,8.5X20X13.3 (Ref # 92152B)	92152-2285	2
KIT-ACCESSORY,TOPCASE BRACKET (Ref # 99994)	99994-0799	1

© 2026 Kawasaki Motors Corp., U.S.A.