2020 Z650

PARTS DIAGRAM

Side Covers/Chain Cover

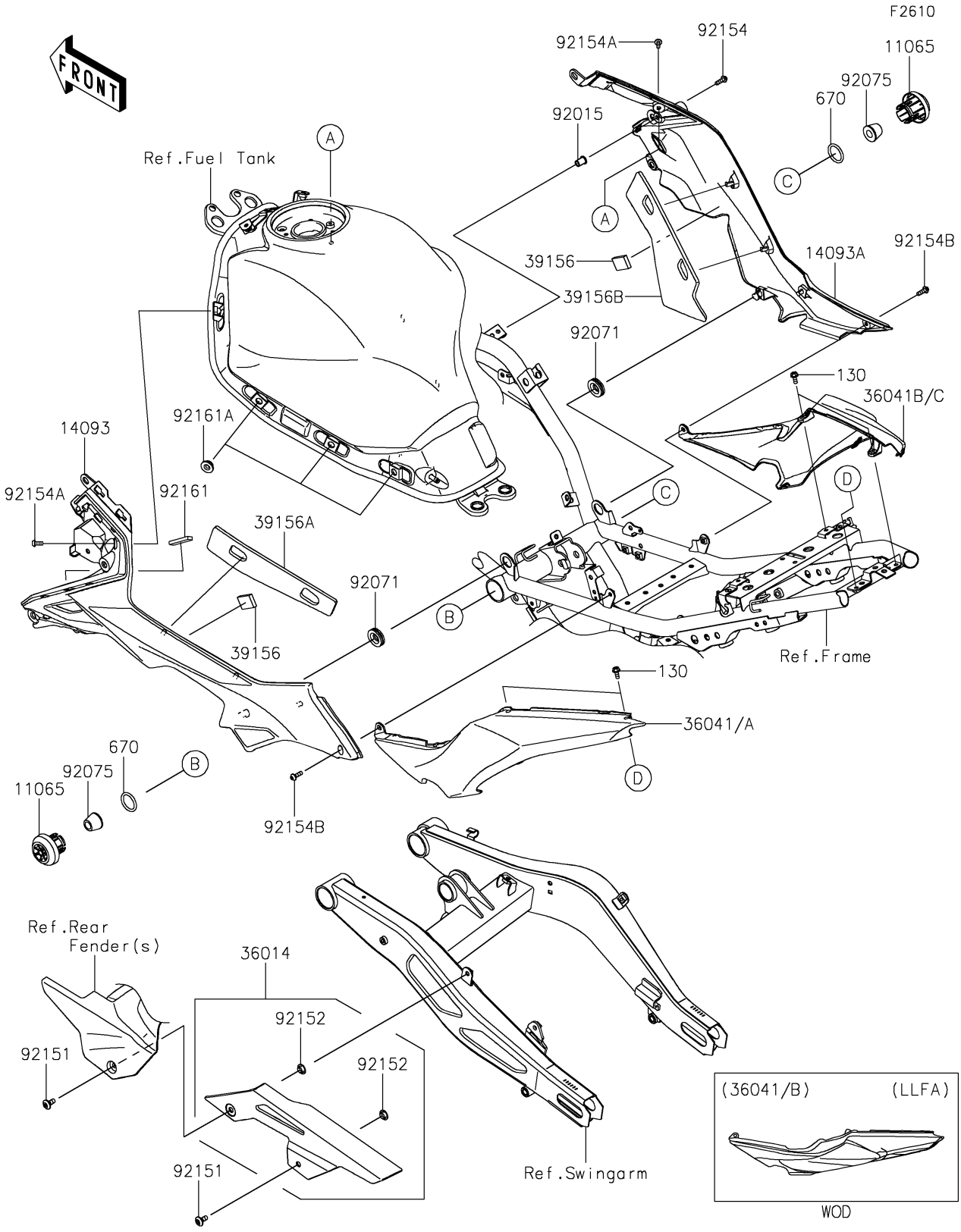

© 2026 Kawasaki Motors Corp., U.S.A.

2020 Z650

PARTS LIST

Side Covers/Chain Cover

ITEM NAME	PART NUMBER	QUANTITY
CAP (Ref # 11065)	11065-0956	2
BOLT-FLANGED,5X12 (Ref # 130)	130BA0512	4
COVER,KNEE GRIP,LH (Ref # 14093)	14093-0613	1
COVER,KNEE GRIP,RH (Ref # 14093A)	14093-0614	1
CASE-CHAIN (Ref # 36014)	36014-0044	1
COVER-TAIL,LH,M.F.S.BLACK (Ref # 36041A)	36041-0033-739	1
COVER-TAIL,RH,M.F.S.BLACK (Ref # 36041C)	36041-0034-739	1
PAD,20X30X6 (Ref # 39156)	39156-1751	2
PAD,KNEE GRIP COVER,LH (Ref # 39156A)	39156-2589	1
PAD,KNEE GRIP COVER,RH (Ref # 39156B)	39156-2590	1
O RING,25MM (Ref # 670)	670B3025	2
NUT,WELL,5MM (Ref # 92015)	92015-1757	1
GROMMET (Ref # 92071)	92071-1043	2
DAMPER,HANDLE HOLDER (Ref # 92075)	92075-039	2
BOLT,SOCKET,6X14 (Ref # 92151)	92151-1654	2
COLLAR,8.8X11.2X4 (Ref # 92152)	92152-0909	2
BOLT,SOCKET,5X16 (Ref # 92154)	92154-0209	1
BOLT,SOCKET,5X12 (Ref # 92154A)	92154-1421	2
BOLT,SOCKET,5X16 (Ref # 92154B)	92154-1701	2
DAMPER,TANK COVER (Ref # 92161)	92161-0804	1
DAMPER,6X20X7.5 (Ref # 92161A)	92161-1937	6

© 2026 Kawasaki Motors Corp., U.S.A.