2020 Z650

PARTS DIAGRAM

Brake Pedal/Torque Link

F2260

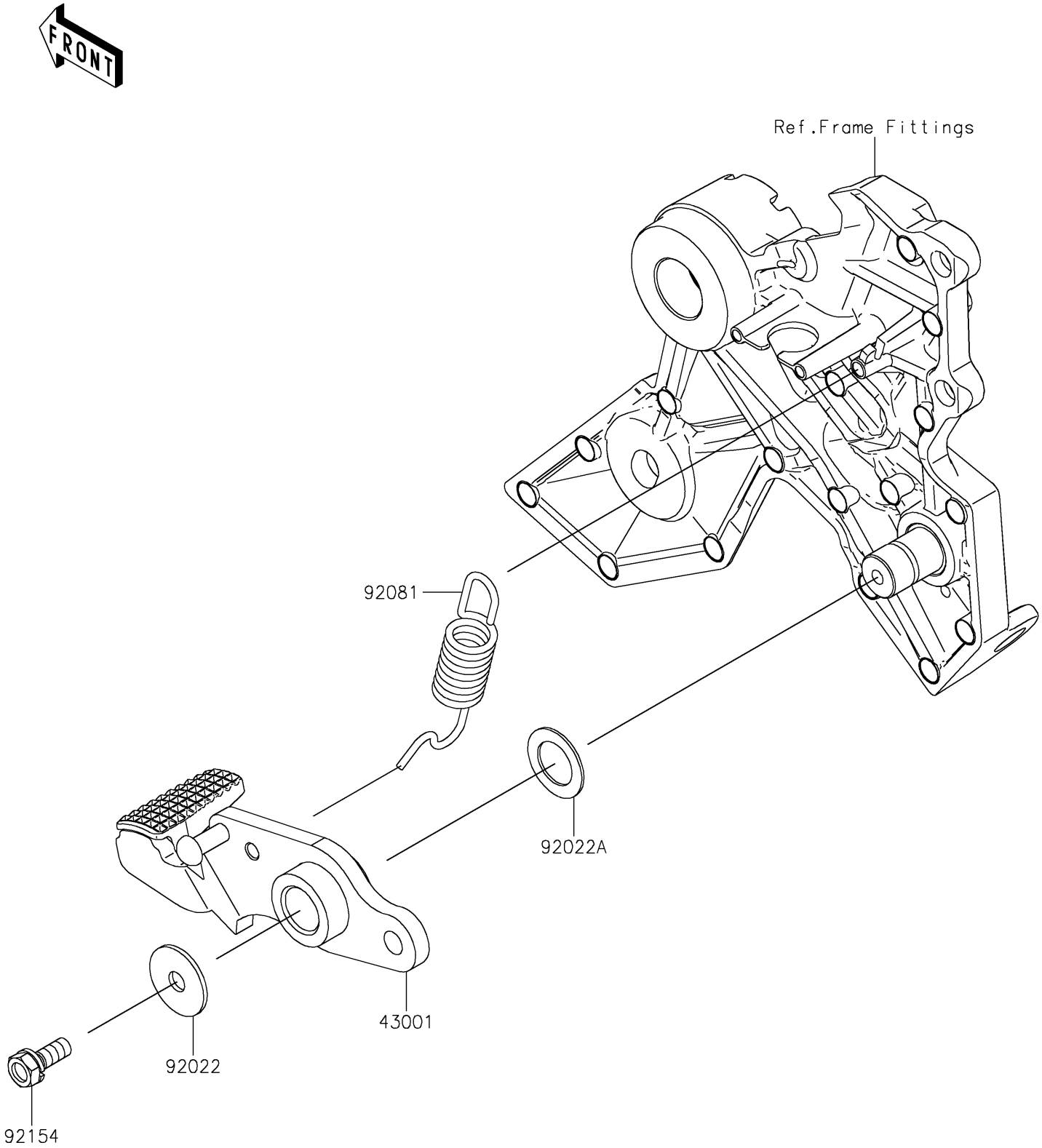

© 2026 Kawasaki Motors Corp., U.S.A.

2020 Z650

PARTS LIST

Brake Pedal/Torque Link

ITEM NAME	PART NUMBER	QUANTITY
LEVER-BRAKE,PEDAL (Ref # 43001)	43001-0748	1
WASHER,7X24X1.6 (Ref # 92022)	92022-228	1
WASHER,15.3X24X1 (Ref # 92022A)	92022-326	1
SPRING,BRAKE PEDAL (Ref # 92081)	92081-1833	1
BOLT,UPSET-WS,6X16 (Ref # 92154)	92154-0935	1

© 2026 Kawasaki Motors Corp., U.S.A.