# 2020 Z650

## PARTS DIAGRAM

### Front Wheel

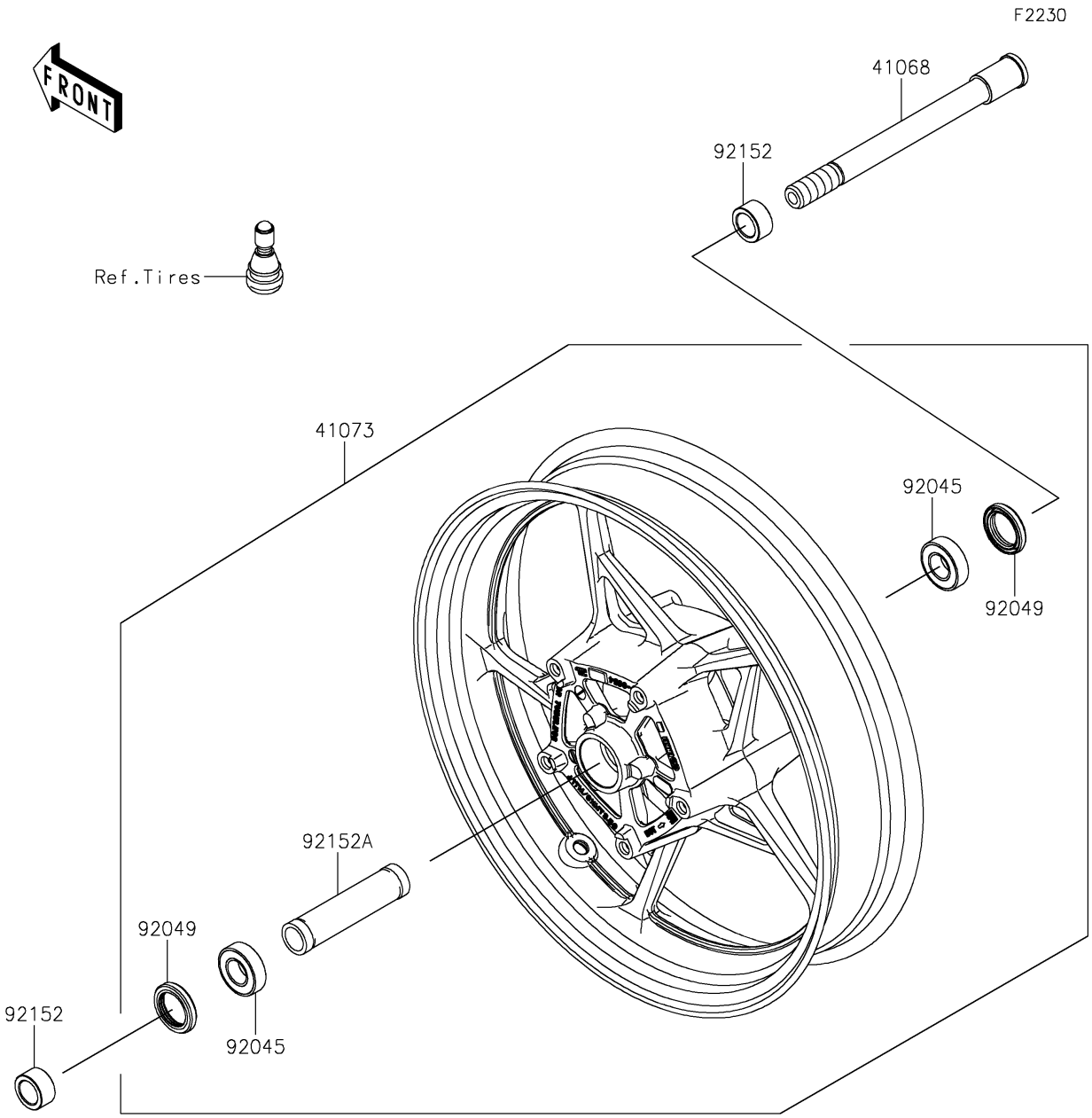


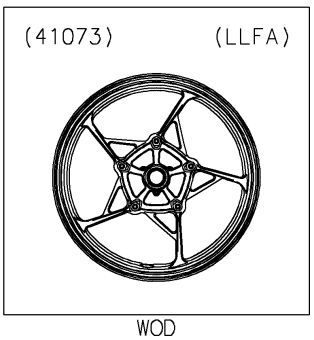


WOD

© 2026 Kawasaki Motors Corp., U.S.A.

# 2020 Z650

## PARTS LIST

### Front Wheel

| ITEM NAME | PART NUMBER | QUANTITY |
|---|---|---|
| AXLE,FR,20X209 (Ref # 41068) | 41068-0616 | 1 |
| WHEEL-ASSY,FR,G.BLACK (Ref # 41073) | 41073-0703-QT | 1 |
| BEARING-BALL,20X42X12 (Ref # 92045) | 92045-0820 | 2 |
| SEAL-OIL,BJN30427 (Ref # 92049) | 92049-0130 | 2 |
| COLLAR,20X30X15.5 (Ref # 92152) | 92152-0946 | 2 |
| COLLAR,20.2X27.2X115 (Ref # 92152A) | 92152-2227 | 1 |

© 2026 Kawasaki Motors Corp., U.S.A.