2000 KX100

PARTS DIAGRAM

Radiator

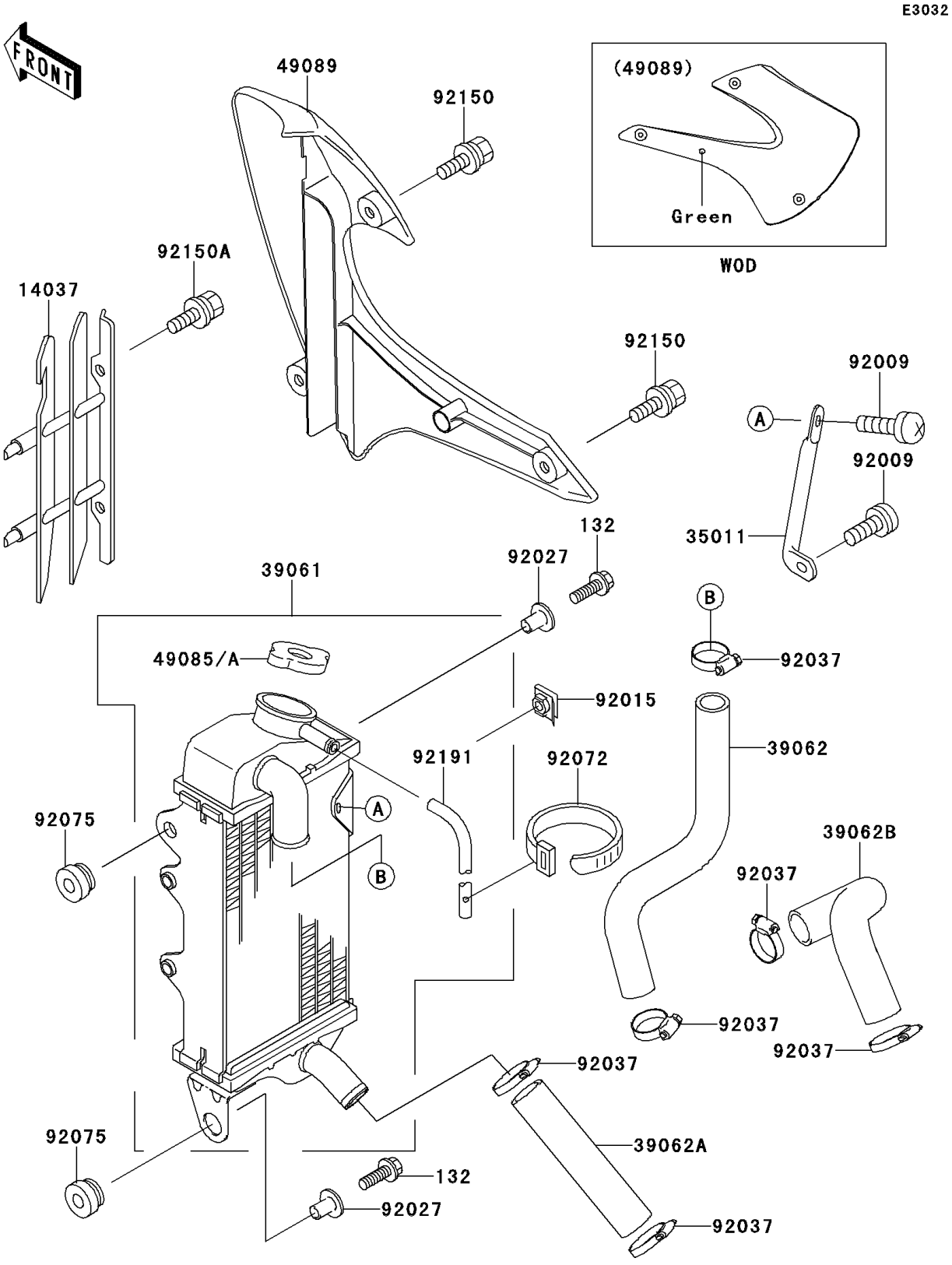

© 2026 Kawasaki Motors Corp., U.S.A.

2000 KX100

PARTS LIST

Radiator

ITEM NAME	PART NUMBER	QUANTITY
BOLT-FLANGED-SMALL (Ref # 132)	132G0625	2
SCREEN,RH,WHITE (Ref # 14037)	14037-1249-RZ	1
STAY (Ref # 35011)	35011-1845	1
RADIATOR-ASSY (Ref # 39061)	39061-1245	1
HOSE-COOLING,HEAD-RADIATOR (Ref # 39062)	39062-1425	1
HOSE-COOLING,RADIATOR-PUMP (Ref # 39062A)	39062-1711	1
HOSE-COOLING,CYLINDER PUMP (Ref # 39062B)	39062-1712	1
CAP-ASSY-PRESSURE,P1.1 (Ref # 49085)	49085-1070	1
CAP-ASSY-PRESSURE,P1.6 (Ref # 49085A)	49085-1073	1
SHROUD-ENGINE,RH,L.GREEN (Ref # 49089)	49089-1139-6W	1
SCREW,6X10 (Ref # 92009)	92009-1661	2
NUT (Ref # 92015)	92015-1487	2
COLLAR (Ref # 92027)	92027-1183	2
CLAMP,COOLING HOSE (Ref # 92037)	92037-1589	6
BAND,L=186 (Ref # 92072)	92072-056	1
DAMPER (Ref # 92075)	92075-1352	2
BOLT,6X14 (Ref # 92150)	92150-1340	3
BOLT,6X12 (Ref # 92150A)	92150-1435	1
TUBE,6X9X700 (Ref # 92191)	92191-1211	1

© 2026 Kawasaki Motors Corp., U.S.A.