2000 KX100

PARTS DIAGRAM

Kickstarter Mechanism

Kawasaki
Let the Good Times Roll®

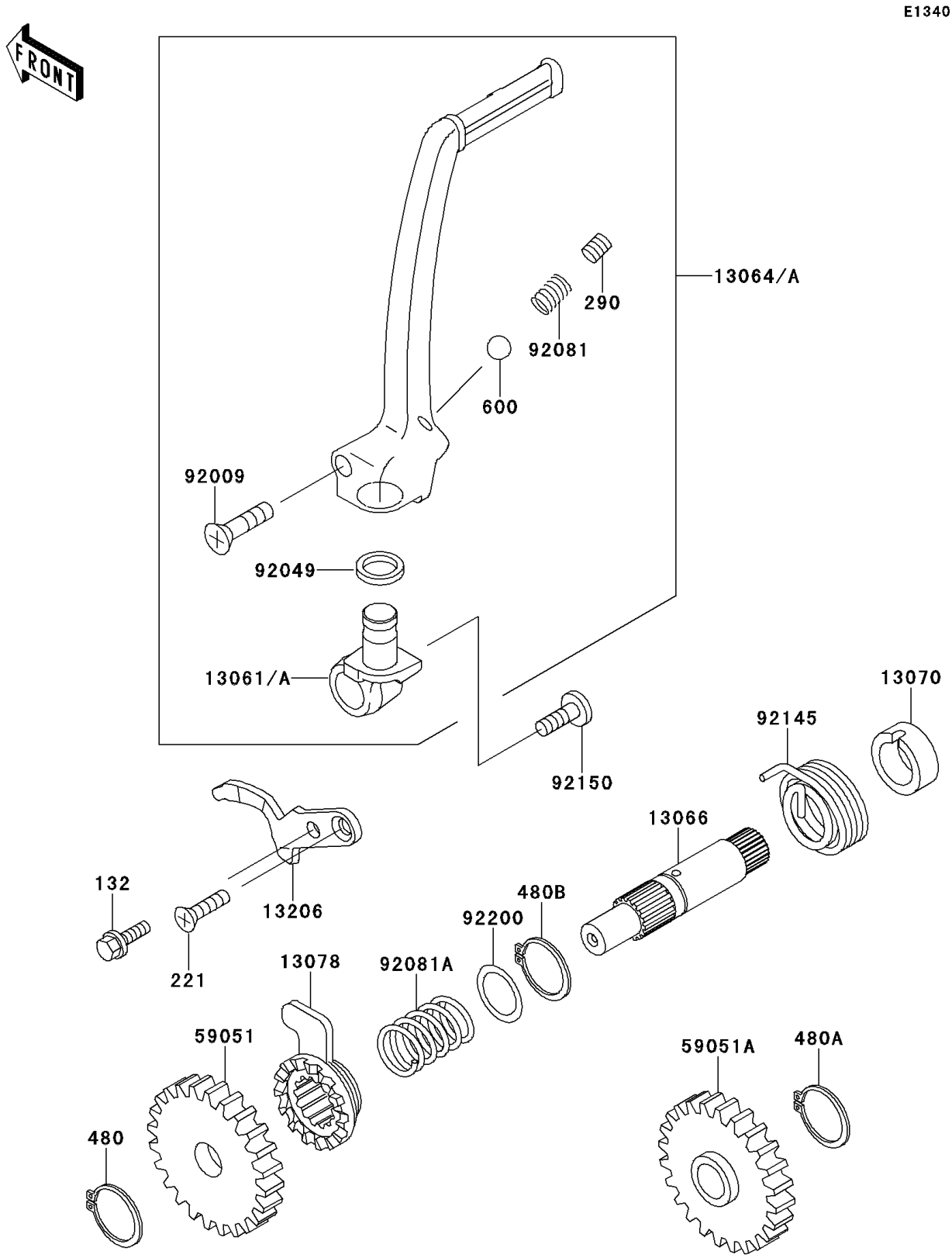

© 2026 Kawasaki Motors Corp., U.S.A.

2000 KX100

PARTS LIST

Kickstarter Mechanism

ITEM NAME	PART NUMBER	QUANTITY
BOLT-FLANGED-SMALL (Ref # 132)	132G0616	1
SCREW-CSK-CROS,6X18 (Ref # 221)	221B0618	1
SCREW-SET-SOCKET (Ref # 290)	290P0808	1
CIRCLIP-TYPE-C,12MM (Ref # 480)	480J1200	1
CIRCLIP-TYPE-C,15MM (Ref # 480A)	480J1500	1
CIRCLIP-TYPE-C,16MM (Ref # 480B)	480J1600	1
BALL-STEEL,1/4" (Ref # 600)	600A0800	1
BOSS,KICK PEDAL (Ref # 13061A)	13061-1712	1
LEVER-ASSY-KICK,PEDAL (Ref # 13064A)	13064-1188	1
SHAFT-KICK (Ref # 13066)	13066-1097	1
GUIDE (Ref # 13070)	13070-1314	1
RATCHET (Ref # 13078)	13078-1004	1
GUIDE-KICK (Ref # 13206)	13206-1066	1
GEAR-SPUR,32T (Ref # 59051)	59051-1026	1
GEAR-SPUR,31T,KICK (Ref # 59051A)	59051-1147	1
SCREW,6X27 (Ref # 92009)	92009-1607	1
SEAL-OIL,SR12162.5 (Ref # 92049)	92049-1468	1
SPRING,KICK PEDAL (Ref # 92081)	92081-020	1
SPRING,RATCHET (Ref # 92081A)	92081-122	1
SPRING (Ref # 92145)	92145-1058	1
BOLT,SOCKET,6X16 (Ref # 92150)	92150-1673	1
WASHER,KICKSHAFT (Ref # 92200)	92200-1209	1

© 2026 Kawasaki Motors Corp., U.S.A.