2000 KX100

PARTS DIAGRAM

Air Cleaner

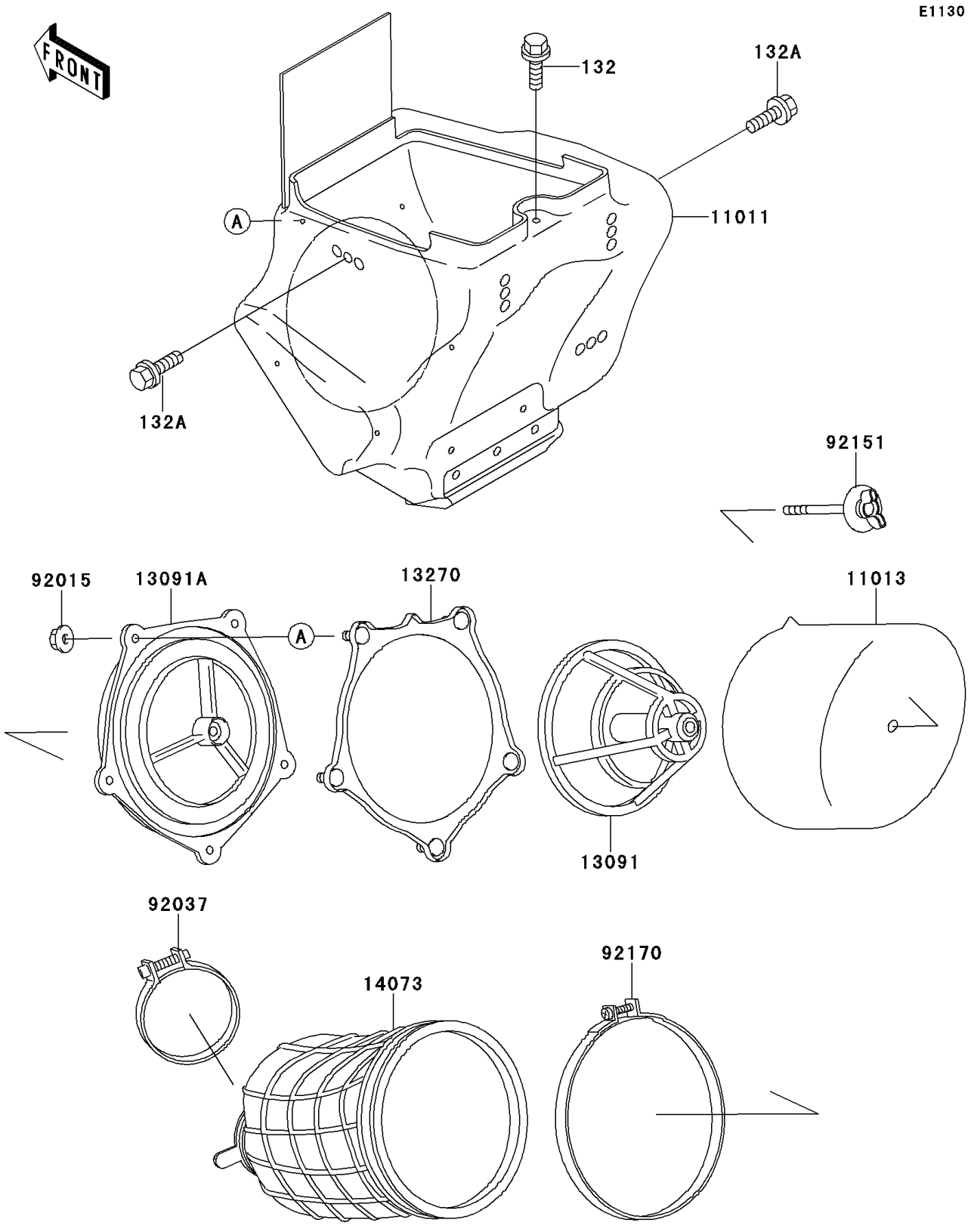

© 2026 Kawasaki Motors Corp., U.S.A.

2000 KX100

PARTS LIST

Air Cleaner

ITEM NAME	PART NUMBER	QUANTITY
BOLT-FLANGED-SMALL (Ref # 132)	132G0608	1
BOLT-FLANGED-SMALL (Ref # 132A)	132G0614	2
CASE-AIR FILTER (Ref # 11011)	11011-1511	1
ELEMENT-AIR FILTER (Ref # 11013)	11013-1271	1
HOLDER,ELEMENT (Ref # 13091)	13091-1696	1
HOLDER (Ref # 13091A)	13091-1697	1
PLATE,AIR FILTER (Ref # 13270)	13270-1905	1
DUCT,AIR FILTER (Ref # 14073)	14073-1717	1
NUT,FLANGED,5MM (Ref # 92015)	92015-1259	5
CLAMP,55MM (Ref # 92037)	92037-1486	1
BOLT,AIR FILTER (Ref # 92151)	92151-1256	1
CLAMP,126MM (Ref # 92170)	92170-1194	1

© 2026 Kawasaki Motors Corp., U.S.A.