1997 KX100

PARTS DIAGRAM

Stand(s)

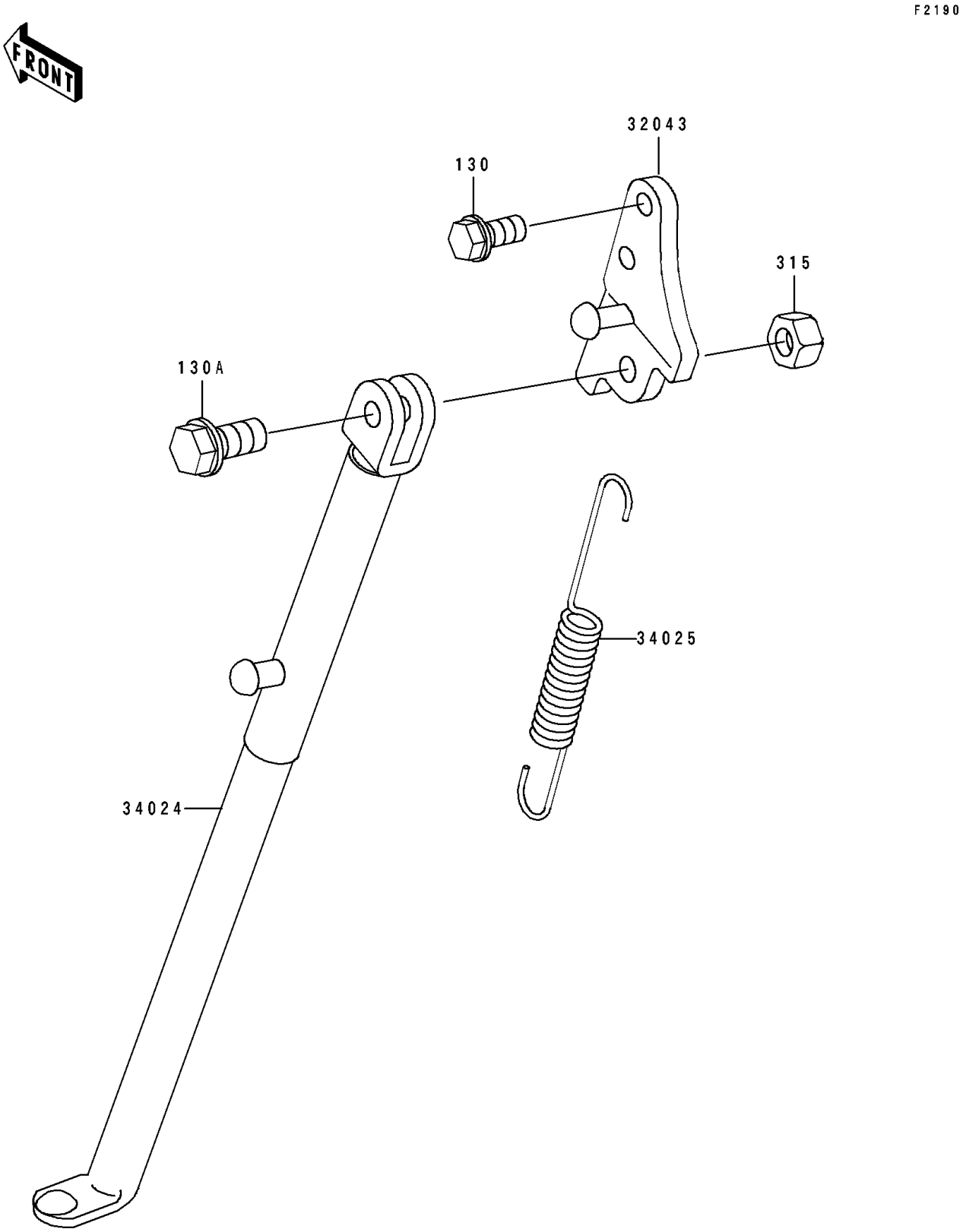

© 2026 Kawasaki Motors Corp., U.S.A.

1997 KX100

PARTS LIST

Stand(s)

ITEM NAME	PART NUMBER	QUANTITY
BRACKET-STAND,SIDE,SILVER (Ref # 32043)	32043-1318-CE	1
STAND-SIDE,SILVER NO.25 (Ref # 34024)	34024-1242-CE	1
SPRING,STAND (Ref # 34025)	34025-005	1
BOLT-FLANGED,8X12 (Ref # 130)	130G0812	2
BOLT-FLANGED,10X30 (Ref # 130A)	130V1030	1
NUT-HEX-FINE,10MM,BLACK (Ref # 315)	315C1000	1

© 2026 Kawasaki Motors Corp., U.S.A.