# 1997 KX100

## PARTS DIAGRAM

### Footrests

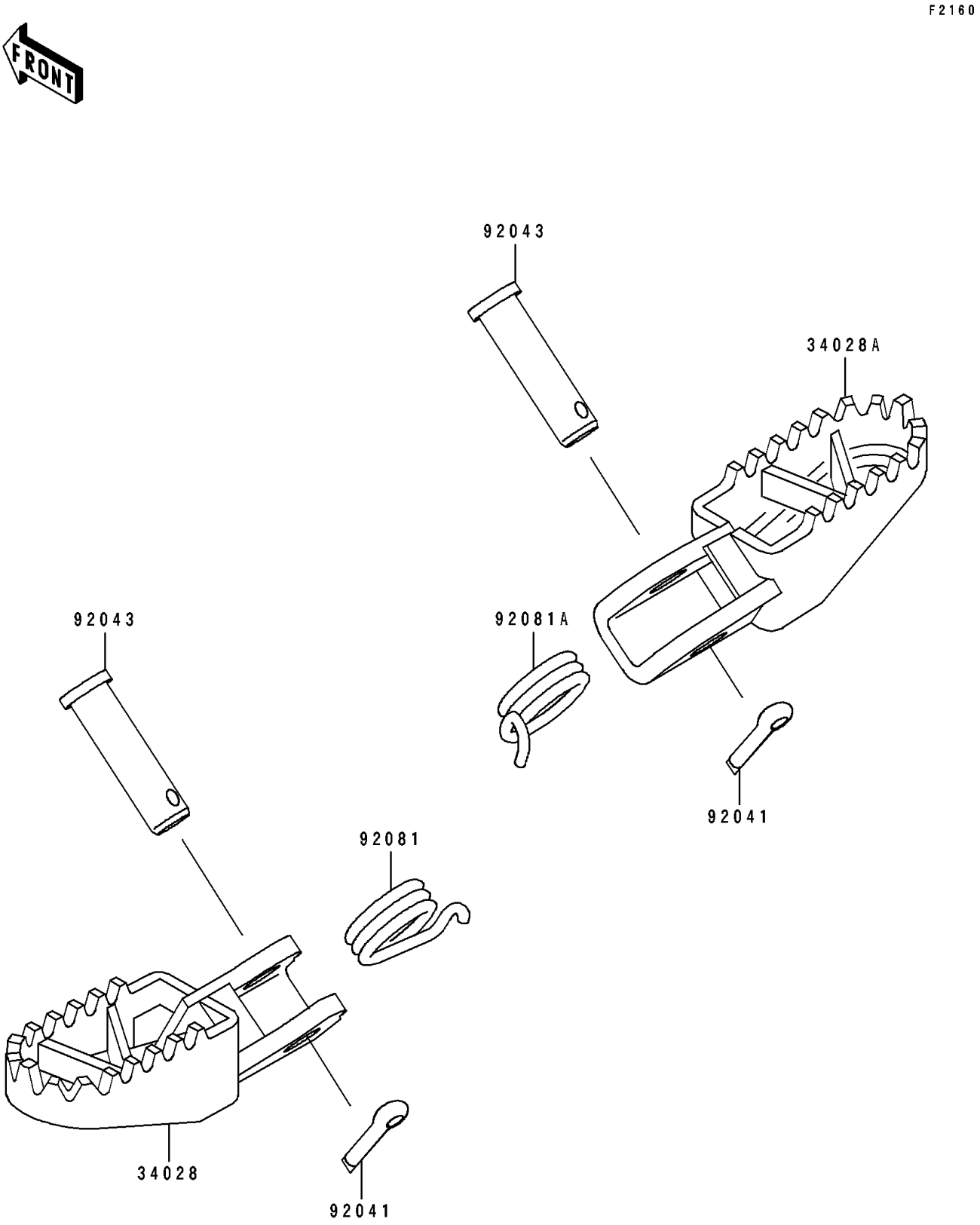


© 2026 Kawasaki Motors Corp., U.S.A.

# 1997 KX100

## PARTS LIST

### Footrests

| ITEM NAME | PART NUMBER | QUANTITY |
|---|---|---|
| STEP,LH,SILVER NO.25 (Ref # 34028) | 34028-1326-CE | 1 |
| STEP,RH,SILVER NO.25 (Ref # 34028A) | 34028-1327-CE | 1 |
| COTTER,2.5X15 (Ref # 92041) | 92041-1051 | 2 |
| PIN,8X32 (Ref # 92043) | 92043-1143 | 2 |
| SPRING,FOOTREST,LH (Ref # 92081) | 92081-1491 | 1 |
| SPRING,FOOTREST,RH (Ref # 92081A) | 92081-1543 | 1 |

© 2026 Kawasaki Motors Corp., U.S.A.