1997 KX100

PARTS DIAGRAM

Muffler(s)

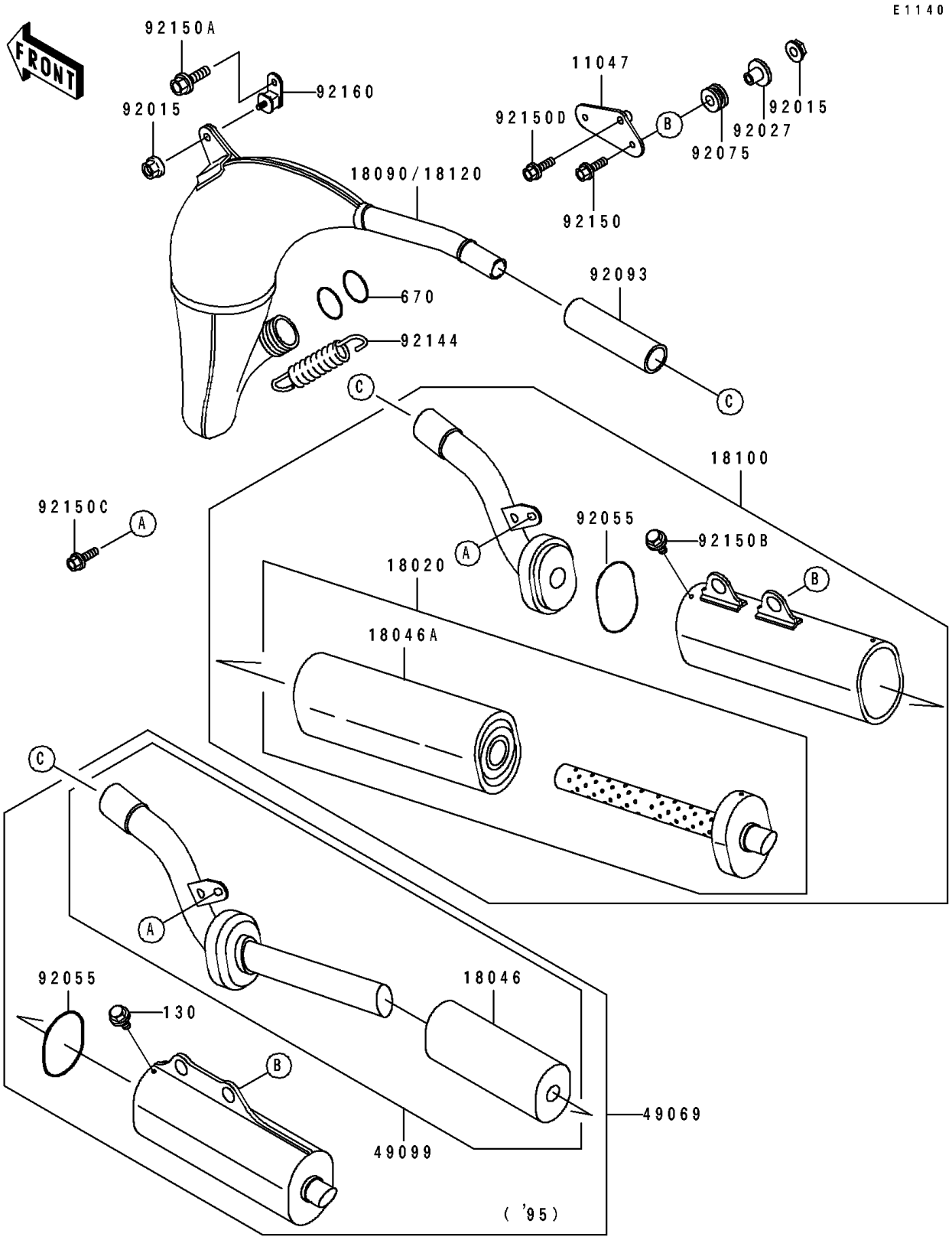

© 2026 Kawasaki Motors Corp., U.S.A.

1997 KX100

PARTS LIST

Muffler(s)

Kawasaki
Let the Good Times Roll®

ITEM NAME	PART NUMBER	QUANTITY
BRACKET,MUFFLER (Ref # 11047)	11047-1495	1
BAFFLE (Ref # 18020)	18020-1233	1
WOOL (Ref # 18046A)	18046-1354	1
BODY-ASSY-MUFFLER (Ref # 18100)	18100-1070	1
CHAMBER-EXHAUST (Ref # 18120)	18120-1076	1
NUT,FLANGED,6MM (Ref # 92015)	92015-1078	3
COLLAR,L=13.1,BLACK (Ref # 92027)	92027-1450	2
RING-O,BAFFLE PIPE (Ref # 92055)	92055-1461	1
DAMPER,MUFFLER FITTING (Ref # 92075)	92075-1857	2
SEAL,MUFFLER JOINT (Ref # 92093)	92093-1200	1
SPRING,EXHAUST CONNECTING (Ref # 92144)	92144-1470	2
BOLT,6X20 (Ref # 92150)	92150-1339	1
BOLT,6X14 (Ref # 92150A)	92150-1340	1
BOLT,5X8 (Ref # 92150B)	92150-1406	4
BOLT,6X12 (Ref # 92150C)	92150-1435	1
BOLT,FLANGED,6X25 (Ref # 92150D)	92150-1507	2
DAMPER,MUFFLER,FR (Ref # 92160)	92160-1176	1
O RING,36MM (Ref # 670)	670E3036	2

© 2026 Kawasaki Motors Corp., U.S.A.