2008 Brute Force 750 4x4i Hardwoods Green HD

PARTS DIAGRAM

Owner's Tools

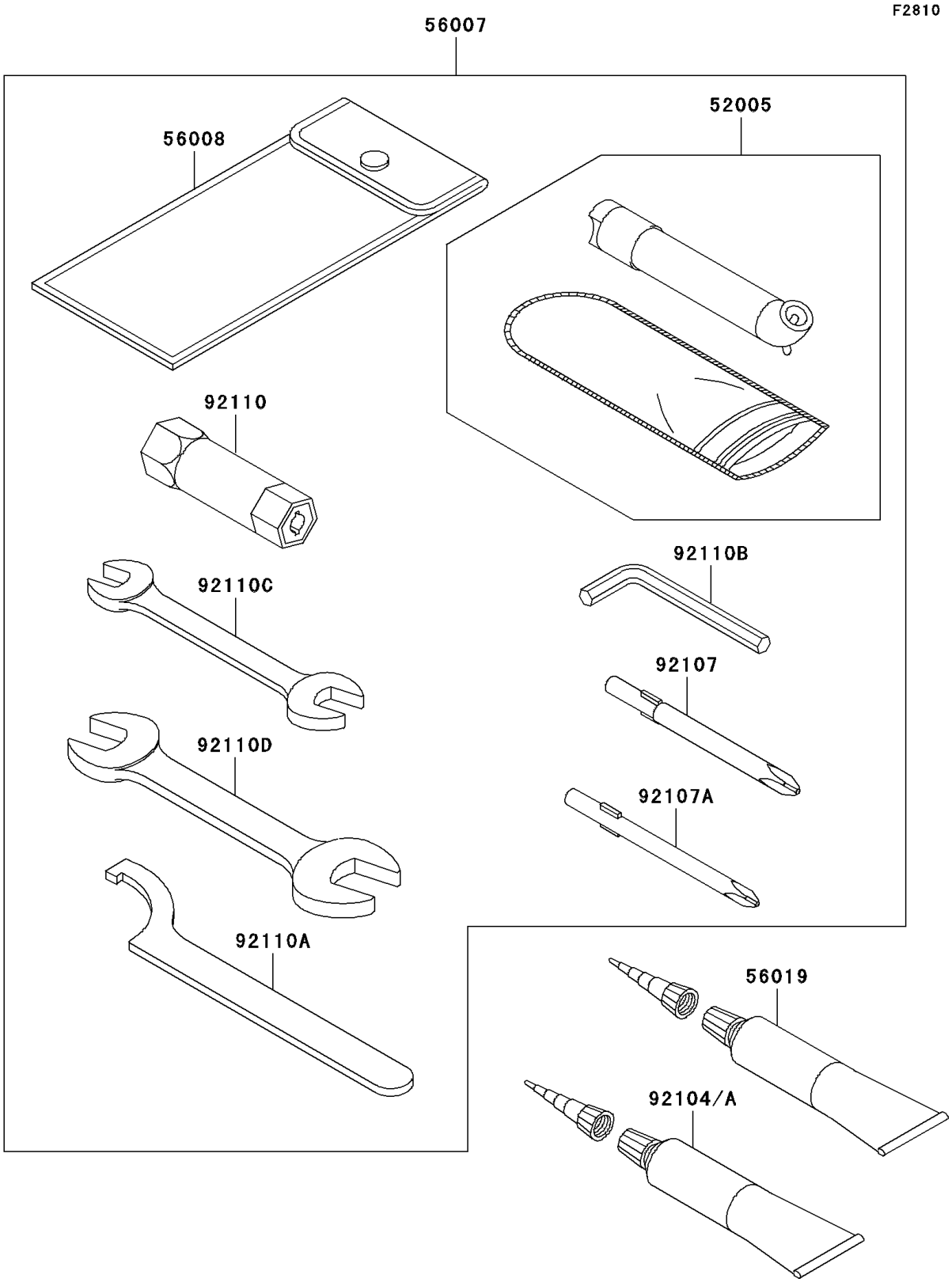

© 2026 Kawasaki Motors Corp., U.S.A.

2008 Brute Force 750 4x4i Hardwoods Green HD

Kawasaki
Let the Good Times Roll®

PARTS LIST

Owner's Tools

ITEM NAME	PART NUMBER	QUANTITY
GAUGE,AIR (Ref # 52005)	52005-1082	1
TOOL-KIT (Ref # 56007)	56007-0014	1
BAG,TOOL (Ref # 56008)	56008-1007	1
GASKET-LIQUID,TB1211,WHITE (Ref # 56019)	56019-120	1
GASKET-LIQUID,TB1211F,CLEAR (Ref # 92104)	92104-0004	1
GASKET-LIQUID,TB1216,GRAY (Ref # 92104A)	92104-1063	1
TOOL-DRIVER,#3PHILLIPS (Ref # 92107)	92107-005	1
TOOL-DRIVER,#2PHILLIPS (Ref # 92107A)	92107-1053	1
TOOL-WRENCH,BOX,16MM (Ref # 92110)	92110-1116	1
TOOL-WRENCH,HOOK (Ref # 92110A)	92110-1129	1
TOOL-WRENCH,ALLEN,3MM (Ref # 92110B)	92110-1140	1
TOOL-WRENCH,OPEN END,10X12 (Ref # 92110C)	92110-1152	1
TOOL-WRENCH,OPEN END,14X17 (Ref # 92110D)	92110-1153	1

© 2026 Kawasaki Motors Corp., U.S.A.