2008 Brute Force 750 4x4i Hardwoods Green HD

Kawasaki
Let the Good Times Roll®

PARTS DIAGRAM

Carrier(s)(E8F-E9FA)

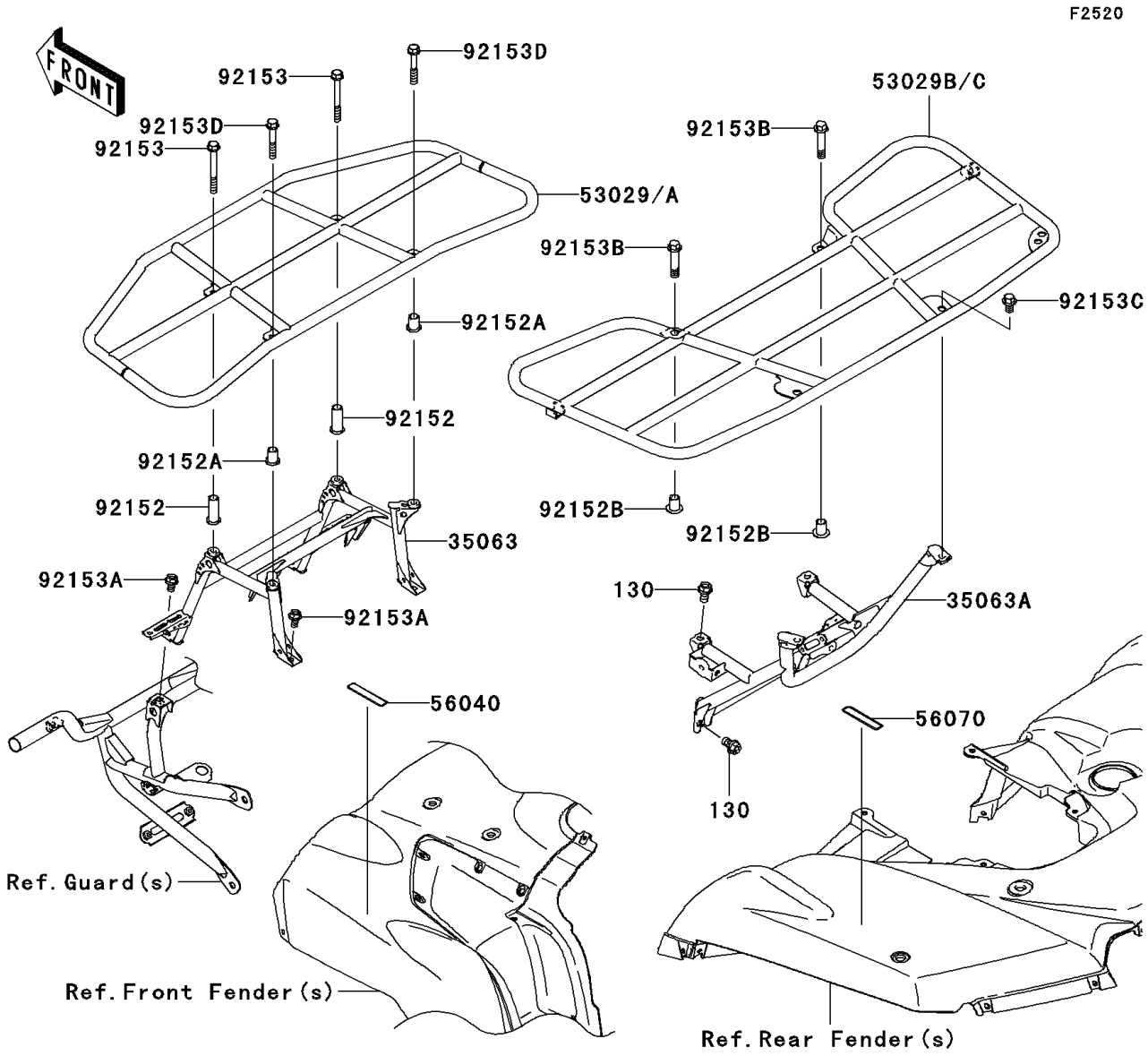

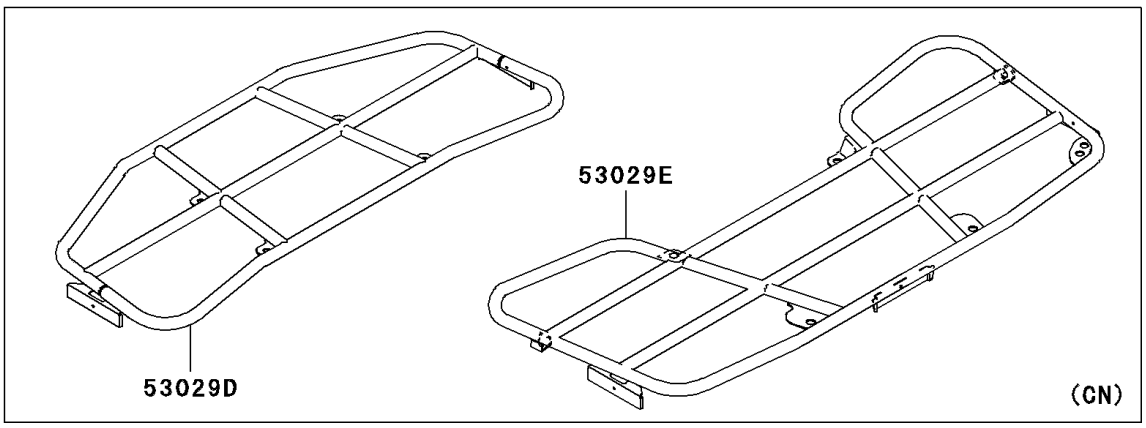

© 2026 Kawasaki Motors Corp., U.S.A.

2008 Brute Force 750 4x4i Hardwoods Green HD

Kawasaki
Let the Good Times Roll®

PARTS LIST

Carrier(s)(E8F-E9FA)

ITEM NAME	PART NUMBER	QUANTITY
BOLT-FLANGED,10X16 (Ref # 130)	130CB1016	4
STAY,FR (Ref # 35063)	35063-0164	1
STAY,REAR CARRIER,T.BLACK (Ref # 35063A)	35063-0501-388	1
LABEL-WARNING,MAXIMUM LOAD (Ref # 56040)	56040-1321	1
LABEL-WARNING,MAXIMUM LOAD (Ref # 56070)	56070-0041	1
COLLAR (Ref # 92152)	92152-0254	2
COLLAR (Ref # 92152A)	92152-0255	2
COLLAR (Ref # 92152B)	92152-0257	2
BOLT,FLANGED,8X70 (Ref # 92153)	92153-0748	2
BOLT,FLANGED,8X14 (Ref # 92153A)	92153-0931	4
BOLT,FLANGED,10X44 (Ref # 92153B)	92153-1374	2
BOLT,FLANGED,10X14 (Ref # 92153C)	92153-1375	2
BOLT,FLANGED,8X50 (Ref # 92153D)	92153-1755	2
CARRIER,FR,T.BLACK (Ref # 53029A)	53029-0054-388	1
CARRIER,RR,T.BLACK (Ref # 53029C)	53029-0055-388	1
CARRIER,FR,T.BLACK (Ref # 53029D)	53029-0056-388	1
CARRIER,RR,T.BLACK (Ref # 53029E)	53029-0057-388	1

© 2026 Kawasaki Motors Corp., U.S.A.