2008 Brute Force 750 4x4i Hardwoods Green HD

Kawasaki
Let the Good Times Roll®

PARTS DIAGRAM

Starter Motor

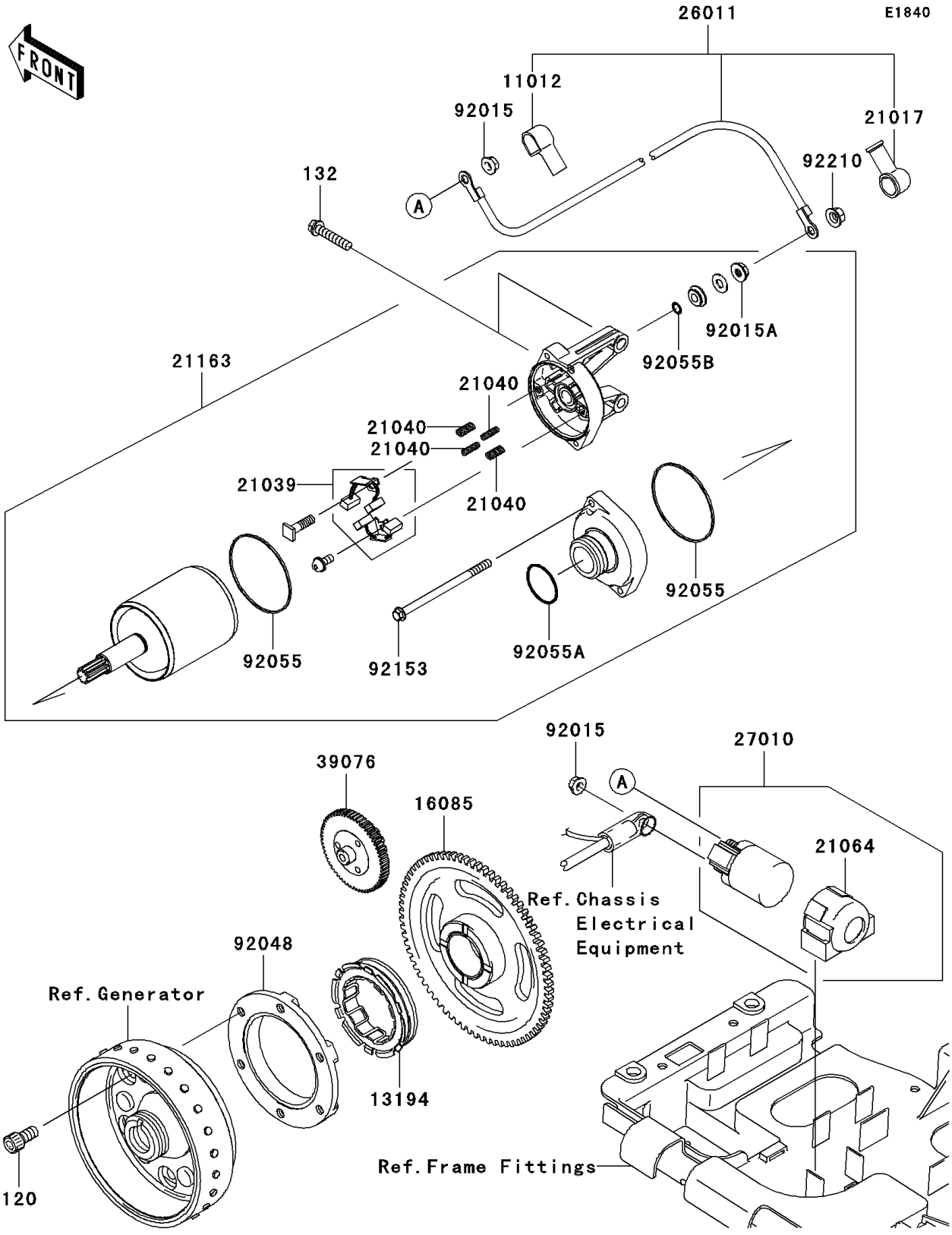

© 2026 Kawasaki Motors Corp., U.S.A.

2008 Brute Force 750 4x4i Hardwoods Green HD

Kawasaki
Let the Good Times Roll®

PARTS LIST

Starter Motor

ITEM NAME	PART NUMBER	QUANTITY
BOLT-SOCKET,8X16 (Ref # 120)	120CA0816	6
BOLT-FLANGED-SMALL,6X30 (Ref # 132)	132BD0630	2
CAP,TERMINAL (Ref # 11012)	11012-1354	1
CLUTCH-ONEWAY (Ref # 13194)	13194-1094	1
GEAR,STARTER (Ref # 16085)	16085-1238	1
GROMMET,STARTER TERMINAL (Ref # 21017)	21017-017	1
BRUSH,CARBON (Ref # 21039)	21039-0004	1
SPRING-BRUSH (Ref # 21040)	21040-0003	4
DAMPER,MAGNETIC SWITCH (Ref # 21064)	21064-002	1
STARTER-ELECTRIC (Ref # 21163)	21163-0037	1
WIRE-LEAD,STARTER CABLE (Ref # 26011)	26011-0111	1
SWITCH,MAGNETIC (Ref # 27010)	27010-1098	1
LIMITER,STARTER (Ref # 39076)	39076-0005	1
NUT,FLANGED,6MM (Ref # 92015)	92015-1367	2
NUT,STARTER MOTOR (Ref # 92015A)	92015-1476	1
RACE,ONE WAY CLUTCH (Ref # 92048)	92048-0002	1
RING-O (Ref # 92055)	92055-0136	2
RING-O (Ref # 92055A)	92055-1276	1
RING-O,4.5X2.0 (Ref # 92055B)	92055-1370	1
BOLT (Ref # 92153)	92153-1850	2
NUT,6MM (Ref # 92210)	92210-0188	1

© 2026 Kawasaki Motors Corp., U.S.A.