2009 Brute Force 750 4x4i NRA Outdoors

Kawasaki
Let the Good Times Roll®

PARTS DIAGRAM

Fuel Pump

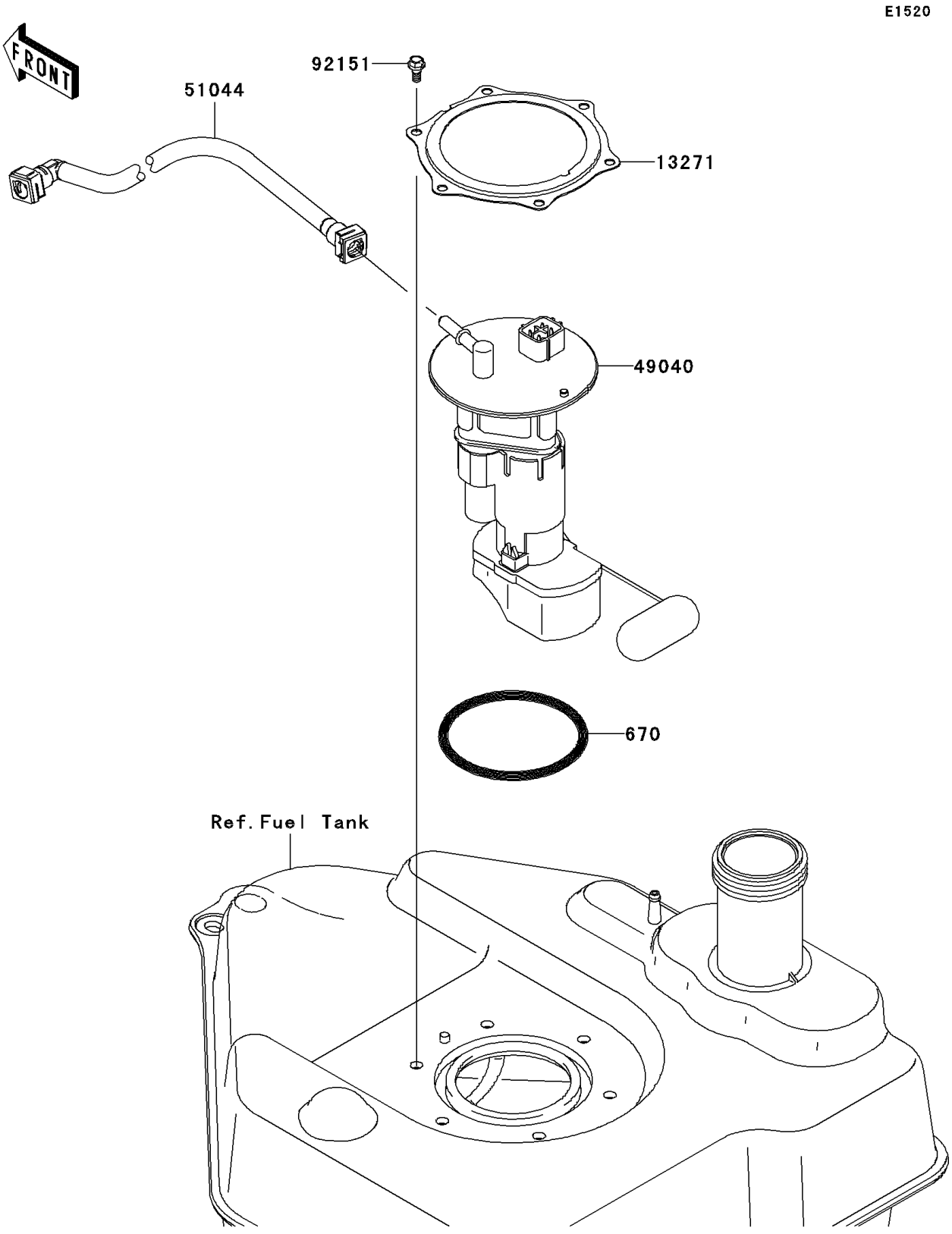

© 2026 Kawasaki Motors Corp., U.S.A.

2009 Brute Force 750 4x4i NRA Outdoors

Kawasaki
Let the Good Times Roll®

PARTS LIST

Fuel Pump

ITEM NAME	PART NUMBER	QUANTITY
O RING (Ref # 670)	670E5090	1
PLATE (Ref # 13271)	13271-0980	1
PUMP-FUEL (Ref # 49040)	49040-0033	1
TUBE-ASSY (Ref # 51044)	51044-0041	1
BOLT,FLANGED,5X11.5 (Ref # 92151)	92151-1754	6

© 2026 Kawasaki Motors Corp., U.S.A.