2008 Brute Force 750 4x4i NRA Outdoors

Kawasaki
Let the Good Times Roll®

PARTS DIAGRAM

Engine Cover(s)

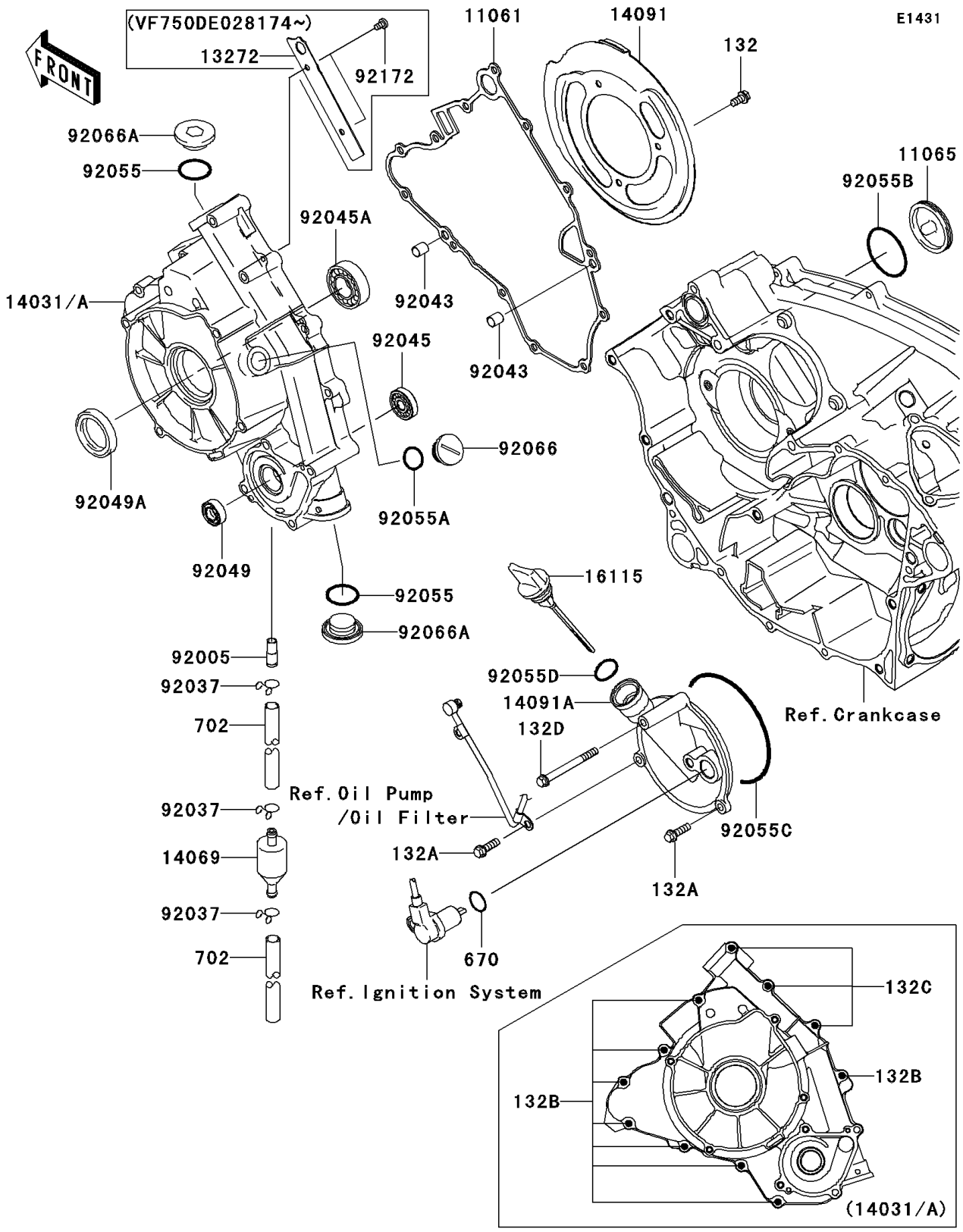

© 2026 Kawasaki Motors Corp., U.S.A.

2008 Brute Force 750 4x4i NRA Outdoors

Kawasaki
Let the Good Times Roll®

PARTS LIST

Engine Cover(s)

ITEM NAME	PART NUMBER	QUANTITY
BOLT-FLANGED-SMALL,6X12 (Ref # 132)	132BD0612	3
BOLT-FLANGED-SMALL,6X20 (Ref # 132A)	132BD0620	2
BOLT-FLANGED-SMALL,6X30 (Ref # 132B)	132BD0630	8
BOLT-FLANGED-SMALL,6X55 (Ref # 132C)	132BD0655	3
BOLT-FLANGED-SMALL,6X65 (Ref # 132D)	132BD0665	1
O RING (Ref # 670)	670D2018	1
TUBE-RUBBER,7X10X35 (Ref # 702)	702A07035	2
GASKET (Ref # 11061)	11061-1119	1
CAP (Ref # 11065)	11065-1151	1
COVER-GENERATOR (Ref # 14031)	14031-0030	1
BREATHER (Ref # 14069)	14069-1051	1
COVER,BELT CONVERTER (Ref # 14091)	14091-0309	1
COVER (Ref # 14091A)	14091-1365	1
CAP-OIL FILLER (Ref # 16115)	16115-1072	1
FITTING (Ref # 92005)	92005-1369	1
CLAMP,TUBE (Ref # 92037)	92037-147	3
PIN,6.2X8X14 (Ref # 92043)	92043-1263	2
BEARING-BALL,6901 (Ref # 92045)	92045-0084	1
BEARING-BALL,TMB004JR2CM (Ref # 92045A)	92045-0086	1
SEAL-OIL,SC 12X22X5 (Ref # 92049)	92049-1228	1
SEAL-OIL,HTC 28X45X7 (Ref # 92049A)	92049-1576	1
RING-O,25.7X2.4 (Ref # 92055)	92055-1136	2
RING-O,20X2 (Ref # 92055A)	92055-1146	1
RING-O,44.7X2.4 (Ref # 92055B)	92055-1279	1
RING-O,99.5X2.0 (Ref # 92055C)	92055-1632	1
RING-O,20X3 (Ref # 92055D)	92055-2185	1
PLUG,COVER (Ref # 92066)	92066-0011	1
PLUG,25X8 (Ref # 92066A)	92066-0012	2

© 2026 Kawasaki Motors Corp., U.S.A.