2007 Brute Force 750 4x4i

PARTS DIAGRAM

Guard(s)(B7F/B7FA)

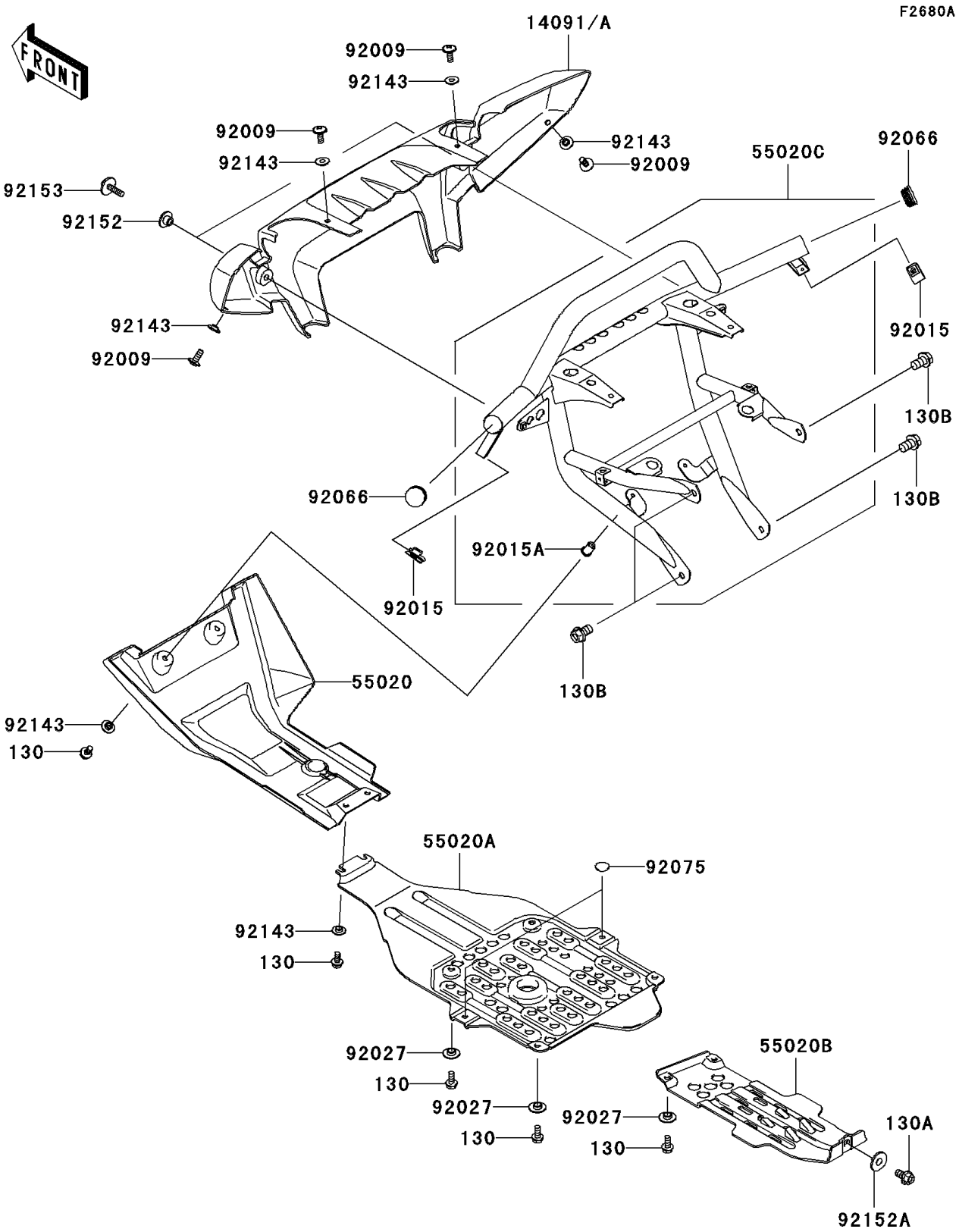

© 2026 Kawasaki Motors Corp., U.S.A.

2007 Brute Force 750 4x4i

PARTS LIST

Guard(s)(B7F/B7FA)

ITEM NAME	PART NUMBER	QUANTITY
BOLT-FLANGED,6X14 (Ref # 130)	130J0614	10
BOLT-FLANGED,8X14 (Ref # 130A)	130J0814	1
BOLT-FLANGED,10X16 (Ref # 130B)	130J1016	4
COVER,FRONT BUMPER,CAMOUFLAGE (Ref # 14091A)	14091-0684-16D	1
GUARD,FRONT SKID,F.BLACK (Ref # 55020)	55020-0064-6Z	1
GUARD,ENGINE (Ref # 55020A)	55020-0065	1
GUARD,REAR GEAR BOX (Ref # 55020B)	55020-0105	1
GUARD,FRONT,W.BLACK (Ref # 55020C)	55020-0270-388	1
SCREW,6X16 (Ref # 92009)	92009-1621	4
NUT,6MM (Ref # 92015)	92015-1602	2
NUT,POP,6MM,L=16.5 (Ref # 92015A)	92015-1792	2
COLLAR,L=4.7 (Ref # 92027)	92027-1964	6
PLUG (Ref # 92066)	92066-0035	2
DAMPER,RUBBER (Ref # 92075)	92075-261	2
COLLAR (Ref # 92143)	92143-1087	8
COLLAR (Ref # 92152)	92152-0181	2
COLLAR (Ref # 92152A)	92152-0198	1
BOLT,SOCKET,6X22 (Ref # 92153)	92153-0665	2

© 2026 Kawasaki Motors Corp., U.S.A.