2007 Brute Force 750 4x4i

PARTS DIAGRAM

Footrests

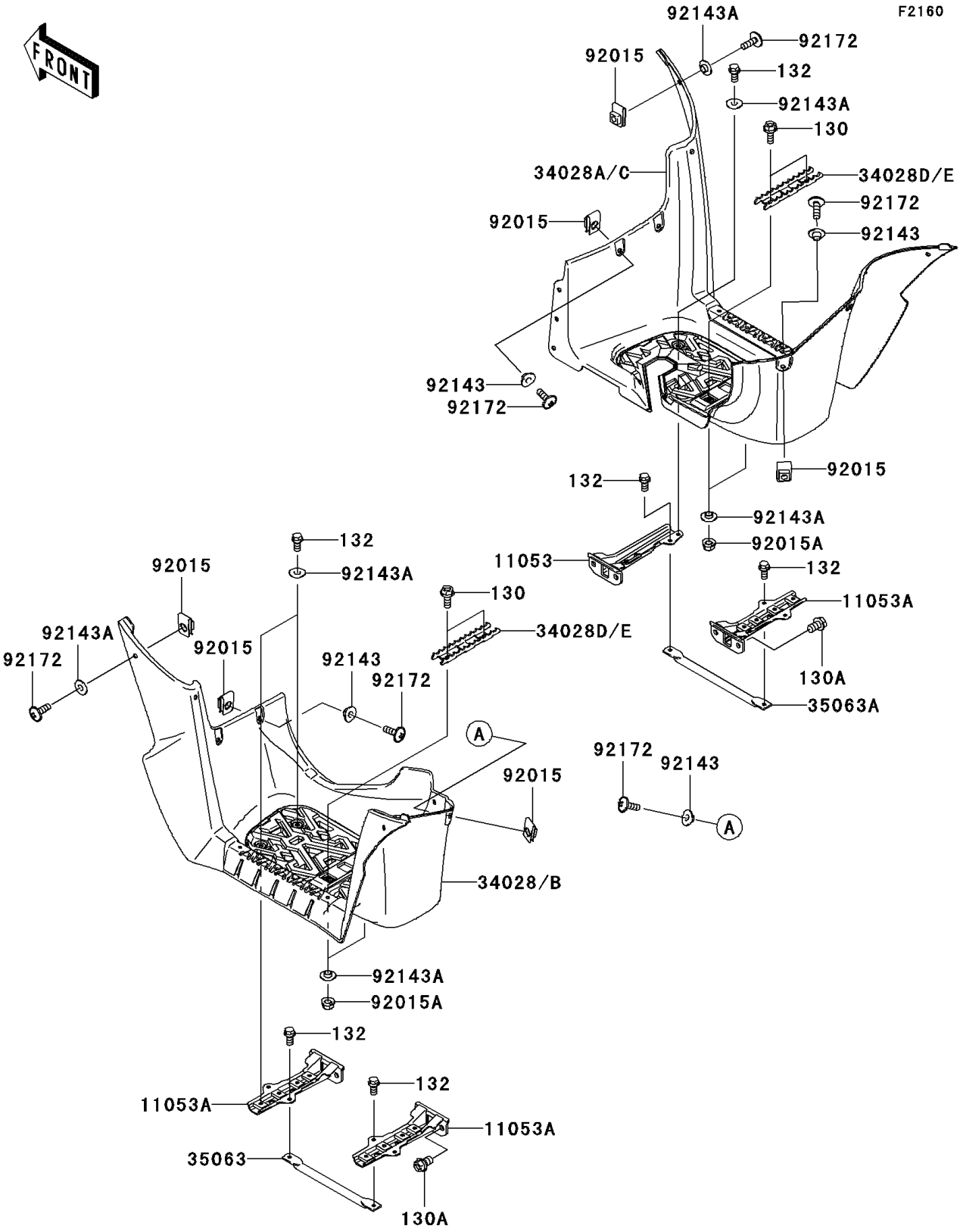

© 2026 Kawasaki Motors Corp., U.S.A.

2007 Brute Force 750 4x4i

PARTS LIST

Footrests

ITEM NAME	PART NUMBER	QUANTITY
BOLT-FLANGED,6X16 (Ref # 130)	130J0616	4
BOLT-FLANGED,10X16 (Ref # 130A)	130S1016	8
BOLT-FLANGED-SMALL,6X12 (Ref # 132)	132J0612	11
BRACKET,FOOT BOARD,RH (Ref # 11053)	11053-0994	1
BRACKET,FOOT BOARD (Ref # 11053A)	11053-0996	3
STEP,FOOT BOARD,LH,F.BLACK (Ref # 34028B)	34028-0054-6Z	1
STEP,FOOT BOARD,RH,F.BLACK (Ref # 34028C)	34028-0055-6Z	1
STEP,FOOT PEG,W.BLACK (Ref # 34028E)	34028-1487-388	2
STAY,STEP,LH (Ref # 35063)	35063-0098	1
STAY,STEP,RH (Ref # 35063A)	35063-0099	1
NUT,6MM (Ref # 92015)	92015-1602	17
NUT,LOCK,FLANGED,6MM (Ref # 92015A)	92015-1603	4
COLLAR (Ref # 92143)	92143-1057	4
COLLAR (Ref # 92143A)	92143-1087	24
SCREW,6X18 (Ref # 92172)	92172-0002	17

© 2026 Kawasaki Motors Corp., U.S.A.