2006 Brute Force 750 4x4i

PARTS DIAGRAM

Muffler(s)(JKAVFDB1 6B503807-)

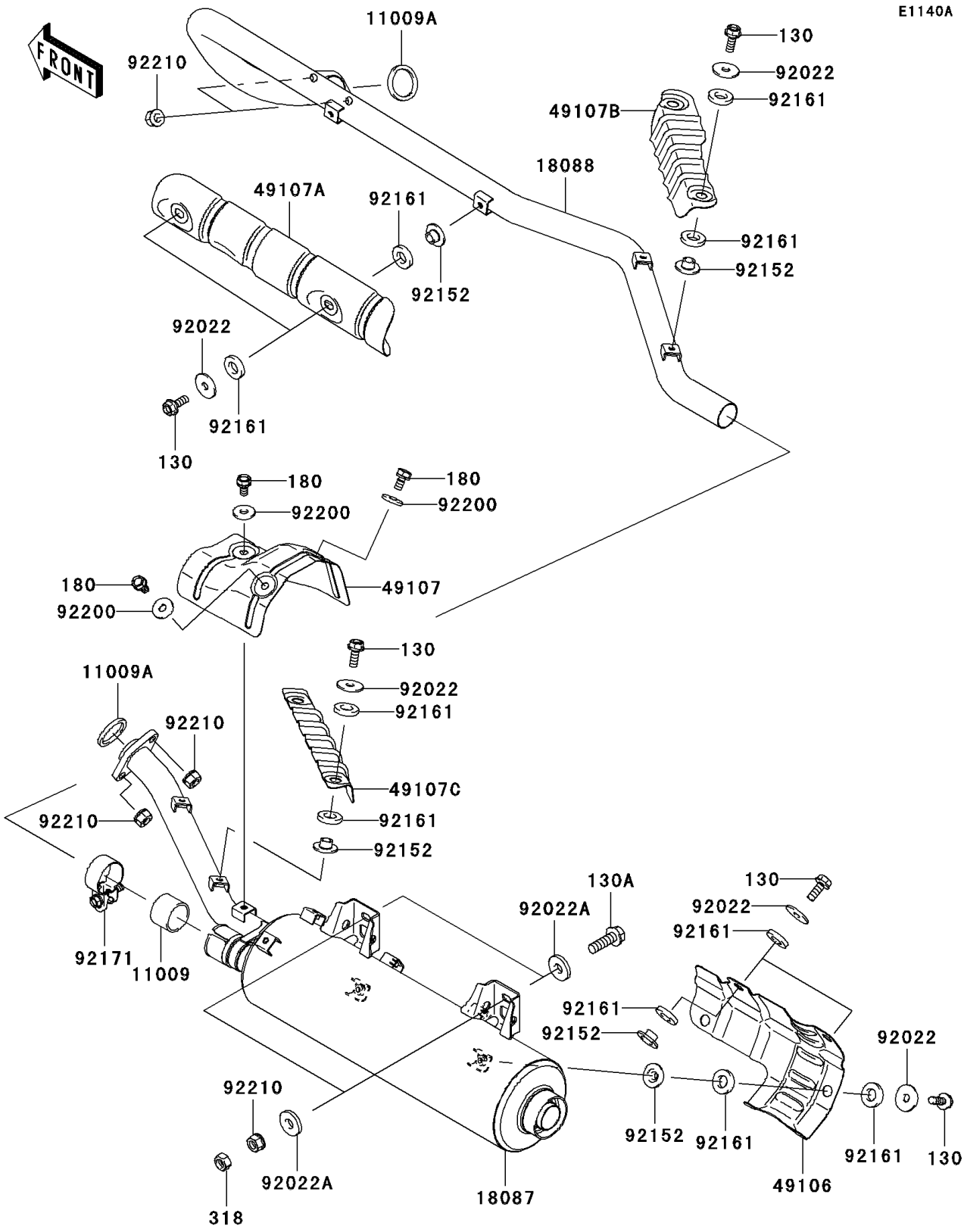

© 2026 Kawasaki Motors Corp., U.S.A.

2006 Brute Force 750 4x4i

PARTS LIST

Muffler(s)(JKAVFDB1 6B503807-)

ITEM NAME	PART NUMBER	QUANTITY
BOLT-FLANGED,6X16 (Ref # 130)	130Y0616	10
BOLT-FLANGED,8X25 (Ref # 130A)	130Z0825	2
BOLT-UPSET-WS,6X12 (Ref # 180)	180Y0612	3
NUT-HEX-SMALL,8MM (Ref # 318)	318G0800	2
GASKET,MUFFLER CONNECTING (Ref # 11009)	11009-1865	1
GASKET,EXHAUST HOLDER (Ref # 11009A)	11009-1894	2
MUFFLER (Ref # 18087)	18087-0098	1
PIPE-EXHAUST (Ref # 18088)	18088-0146	1
COVER-MUFFLER (Ref # 49106)	49106-0048	1
COVER-EXHAUST PIPE,RR (Ref # 49107)	49107-0050	1
COVER-EXHAUST PIPE,FR (Ref # 49107A)	49107-0065	1
COVER-EXHAUST PIPE,MIDDLE LH (Ref # 49107B)	49107-0066	1
COVER-EXHAUST PIPE,MIDDLE RH (Ref # 49107C)	49107-0067	1
WASHER,6.5X22X1.6 (Ref # 92022)	92022-237	10
WASHER,8.5X22X3.2 (Ref # 92022A)	92022-276	4
COLLAR (Ref # 92152)	92152-0423	10
DAMPER (Ref # 92161)	92161-0319	20
CLAMP (Ref # 92171)	92171-1330	1
WASHER,6.5X18X2.0 (Ref # 92200)	92200-2035	3
NUT,8MM (Ref # 92210)	92210-1242	6

© 2026 Kawasaki Motors Corp., U.S.A.