2008 Vulcan® 500 LTD

PARTS DIAGRAM

Side Covers/Chain Cover

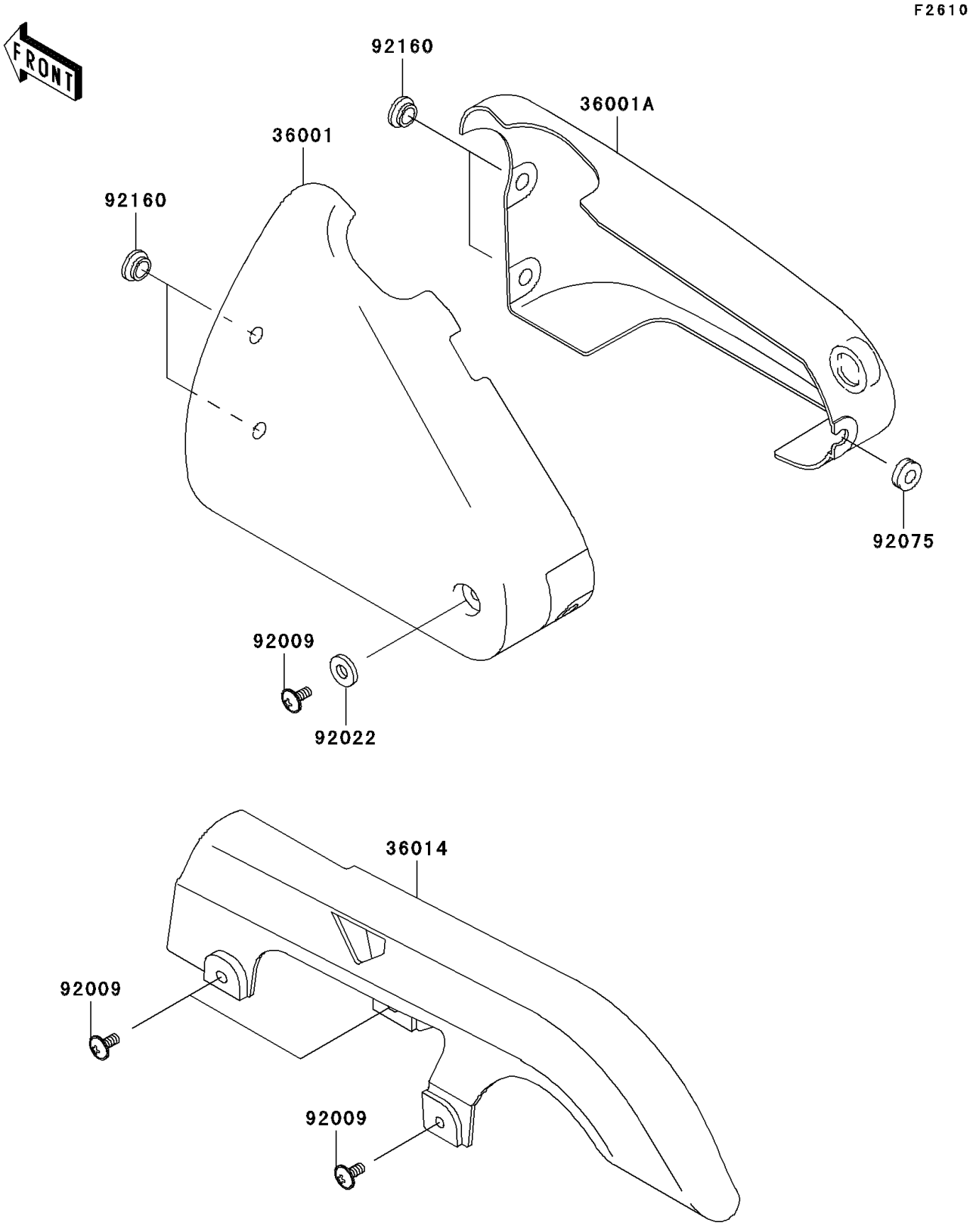

© 2026 Kawasaki Motors Corp., U.S.A.

2008 Vulcan® 500 LTD

PARTS LIST

Side Covers/Chain Cover

ITEM NAME	PART NUMBER	QUANTITY
COVER-SIDE,LH,EBONY (Ref # 36001)	36001-1559-H8	1
COVER-SIDE,RH,EBONY (Ref # 36001A)	36001-1560-H8	1
CASE-CHAIN (Ref # 36014)	36014-1201	1
SCREW,6X14 (Ref # 92009)	92009-1662	4
WASHER,6.5X16X1 (Ref # 92022)	92022-1143	1
DAMPER (Ref # 92075)	92075-1629	1
DAMPER (Ref # 92160)	92160-1764	4

© 2026 Kawasaki Motors Corp., U.S.A.