2015 KFX®50

PARTS DIAGRAM

Muffler(s)

E1140

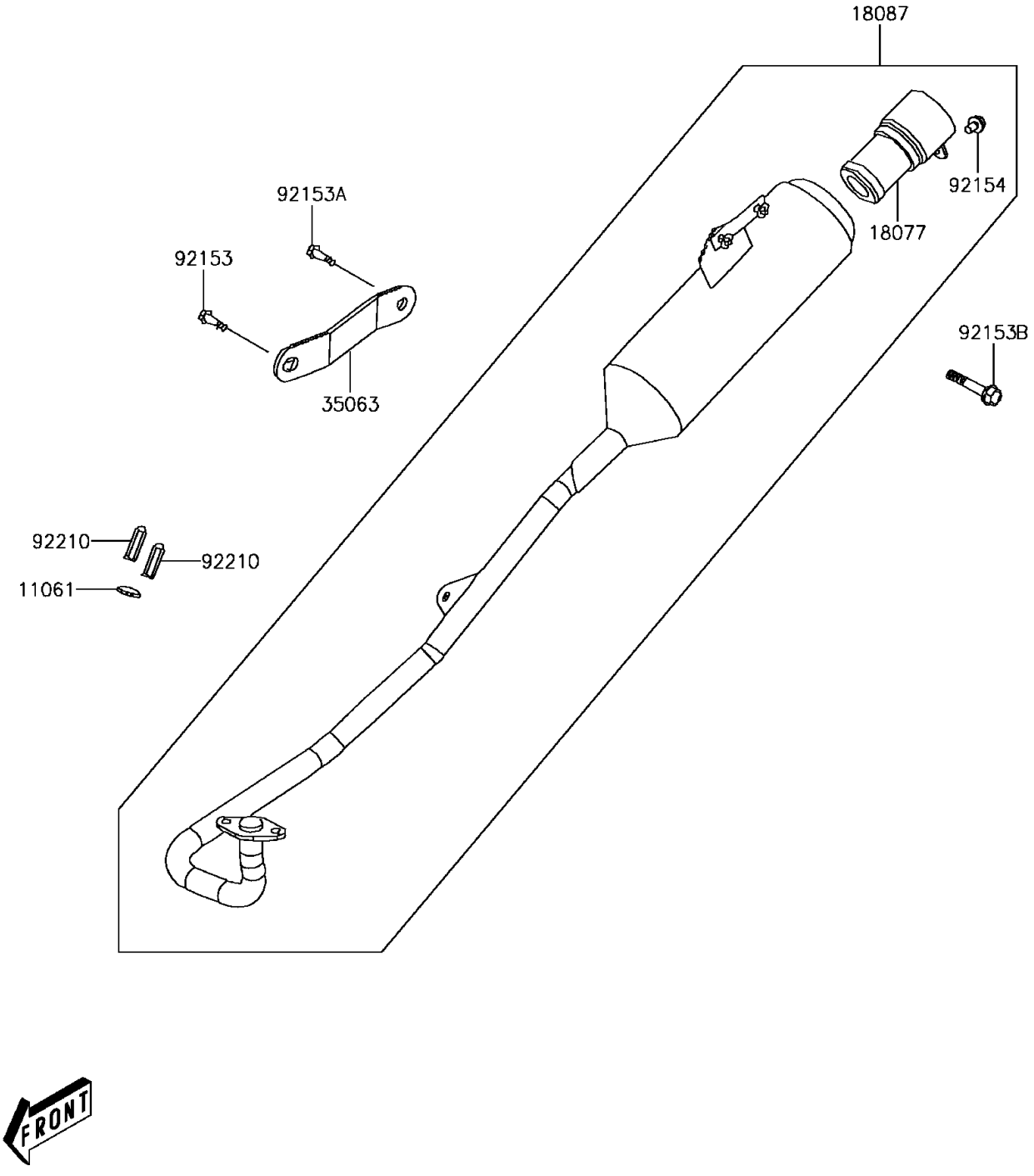

© 2026 Kawasaki Motors Corp., U.S.A.

2015 KFX®50

PARTS LIST

Muffler(s)

ITEM NAME	PART NUMBER	QUANTITY
GASKET,EXHAUST (Ref # 11061)	11061-Y014	1
ARRESTER-SPARK (Ref # 18077)	18077-Y002	1
MUFFLER (Ref # 18087)	18087-Y003	1
STAY,MUFFLER (Ref # 35063)	35063-Y001	1
BOLT,8X28 (Ref # 92153)	92153-Y020	1
BOLT,FLANGE,8X16 (Ref # 92153A)	92153-Y032	1
BOLT,FLANGE,8X38 (Ref # 92153B)	92153-Y070	1
BOLT,FLANGE,6X10 (Ref # 92154)	92154-Y013	1
NUT,CAP,6MM (Ref # 92210)	92210-Y007	2

© 2026 Kawasaki Motors Corp., U.S.A.