2013 BRUTE FORCE® 300

PARTS DIAGRAM

Radiator

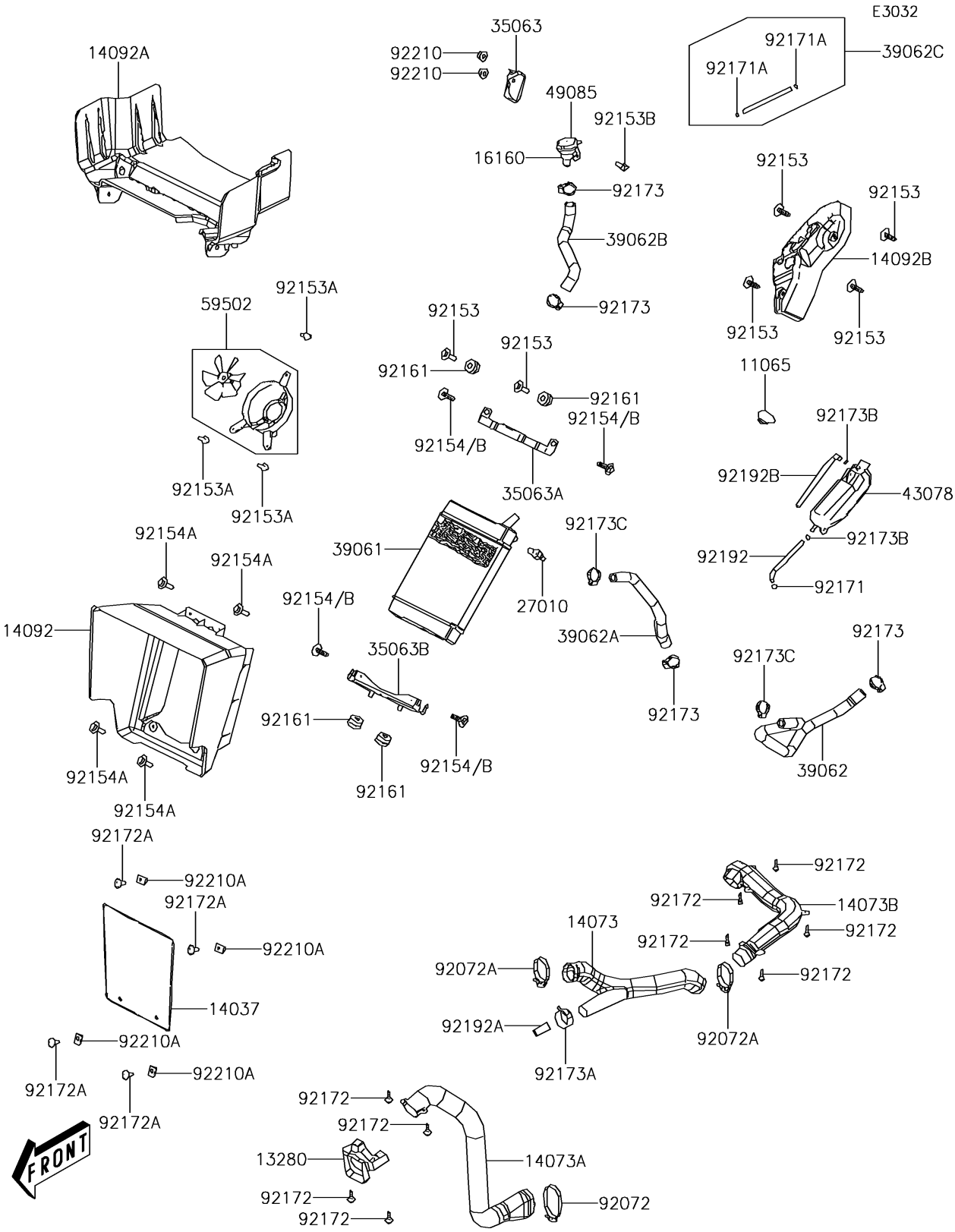

© 2026 Kawasaki Motors Corp., U.S.A.

2013 BRUTE FORCE® 300

PARTS LIST

Radiator

ITEM NAME	PART NUMBER	QUANTITY

© 2026 Kawasaki Motors Corp., U.S.A.