2004 Prairie 700 4x4

PARTS DIAGRAM

Optional Parts(Guard)

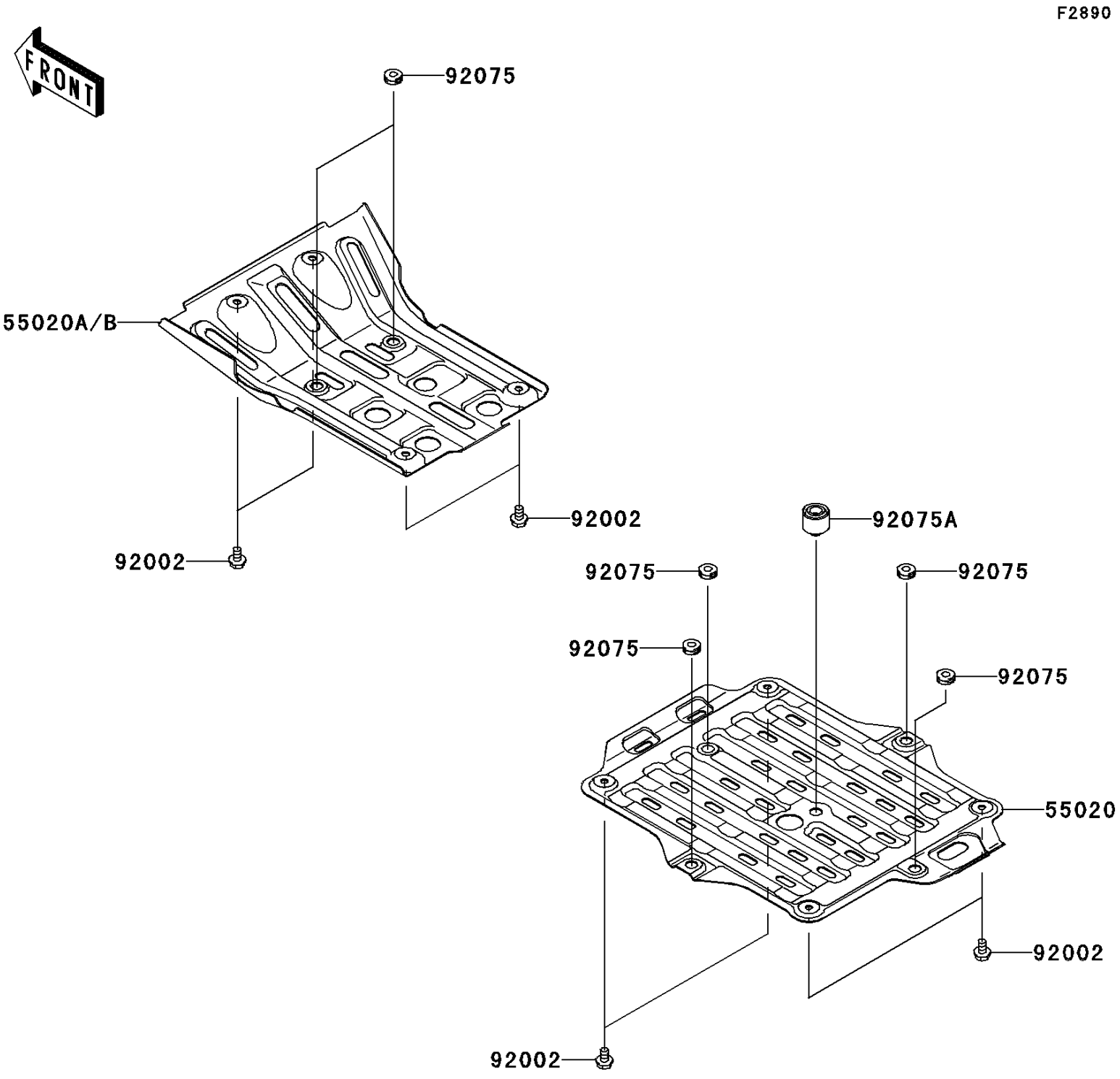

© 2026 Kawasaki Motors Corp., U.S.A.

2004 Prairie 700 4x4

PARTS LIST

Optional Parts(Guard)

ITEM NAME	PART NUMBER	QUANTITY
GUARD,ENGINE,UNDER (Ref # 55020)	55020-1712	1
GUARD,FRONT SKID,S.GOLD (Ref # 55020A)	55020-1748-UF	1
BOLT,6X10 (Ref # 92002)	92002-1449	8
DAMPER (Ref # 92075)	92075-051	6
DAMPER (Ref # 92075A)	92075-1002	1

© 2026 Kawasaki Motors Corp., U.S.A.