# 2004 Prairie 700 4x4

## PARTS DIAGRAM

### Frame Fittings

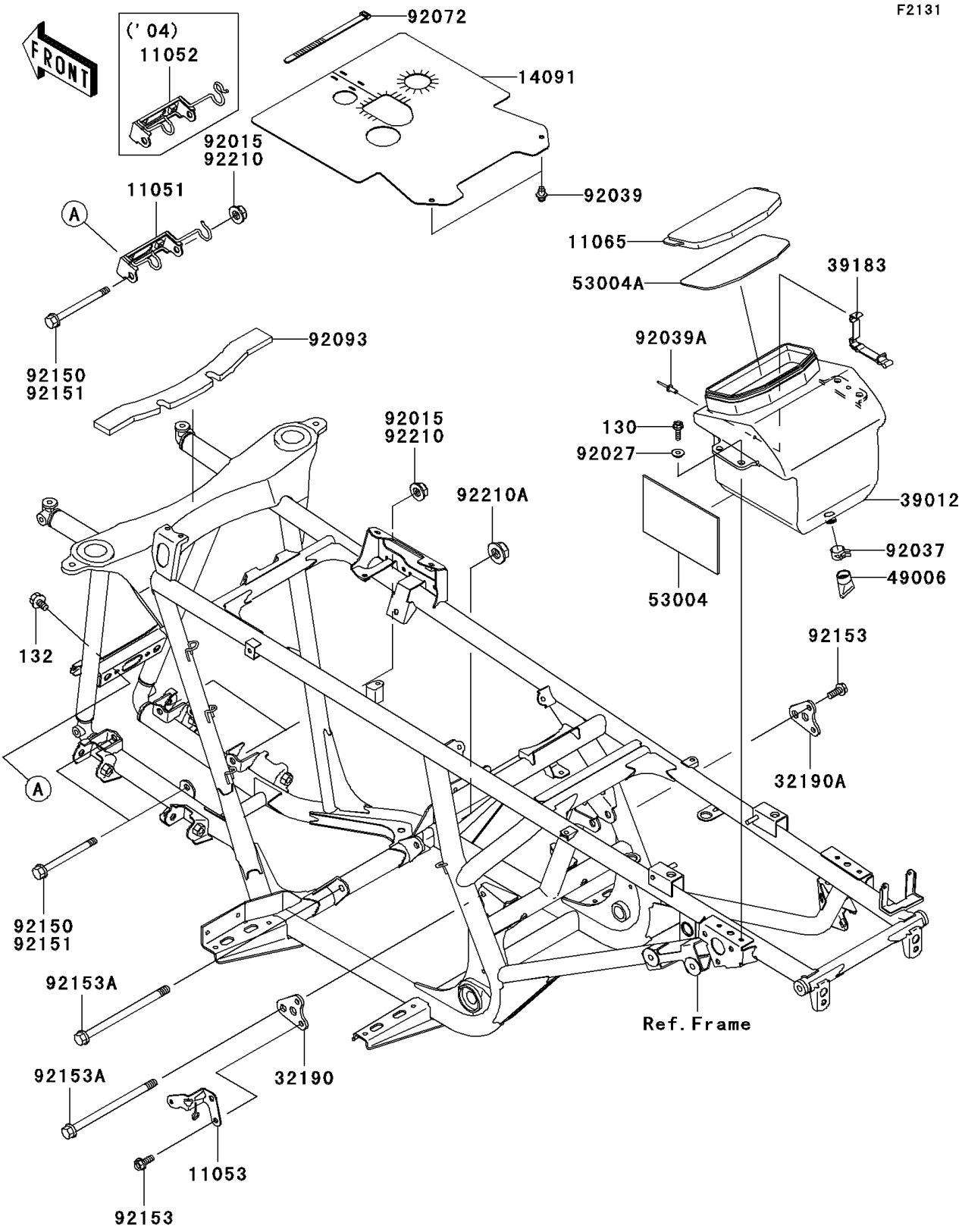


© 2026 Kawasaki Motors Corp., U.S.A.

# 2004 Prairie 700 4x4

## PARTS LIST

### Frame Fittings

| ITEM NAME | PART NUMBER | QUANTITY |
|---|---|---|
| BOLT-FLANGED,6X20 (Ref # 130) | 130G0620 | 4 |
| BOLT-FLANGED-SMALL,8X14 (Ref # 132) | 132J0814 | 2 |
| BRACKET,FRONT DIFF (Ref # 11052) | 11052-1181 | 1 |
| BRACKET,RESERVOIR TANK (Ref # 11053) | 11053-0481 | 1 |
| CAP,STORAGE CASE (Ref # 11065) | 11065-1154 | 1 |
| COVER,FR,UPP (Ref # 14091) | 14091-1347 | 1 |
| BRACKET-ENGINE,RR,UPP,LH (Ref # 32190) | 32190-0045 | 1 |
| BRACKET-ENGINE,RR,UPP,RH (Ref # 32190A) | 32190-0046 | 1 |
| CASE-STORAGE (Ref # 39012) | 39012-1064 | 1 |
| BAND-ASSY,TOOL BAG (Ref # 39183) | 39183-1065 | 1 |
| BOOT (Ref # 49006) | 49006-1292 | 1 |
| MAT,STORAGE CASE (Ref # 53004) | 53004-1139 | 1 |
| MAT,STORAGE CASE CAP (Ref # 53004A) | 53004-1147 | 1 |
| COLLAR (Ref # 92027) | 92027-1936 | 4 |
| CLAMP,HOSE CLIP (Ref # 92037) | 92037-1460 | 1 |
| RIVET (Ref # 92039) | 92039-1229 | 2 |
| RIVET,4.8MM (Ref # 92039A) | 92039-3719 | 2 |
| BAND,L=123 (Ref # 92072) | 92072-030 | 2 |
| SEAL (Ref # 92093) | 92093-1555 | 1 |
| BOLT,FLANGED,10X120 (Ref # 92151) | 92151-1914 | 3 |
| BOLT,FLANGED,8X20 (Ref # 92153) | 92153-0948 | 4 |
| BOLT,FLANGED,12X190 (Ref # 92153A) | 92153-1272 | 2 |
| NUT,LOCK,FLANGED,10MM (Ref # 92210) | 92210-1081 | 3 |
| NUT,LOCK,FLANGED,12MM (Ref # 92210A) | 92210-1150 | 1 |

© 2026 Kawasaki Motors Corp., U.S.A.