2020 KLX®230R

PARTS DIAGRAM

Swingarm

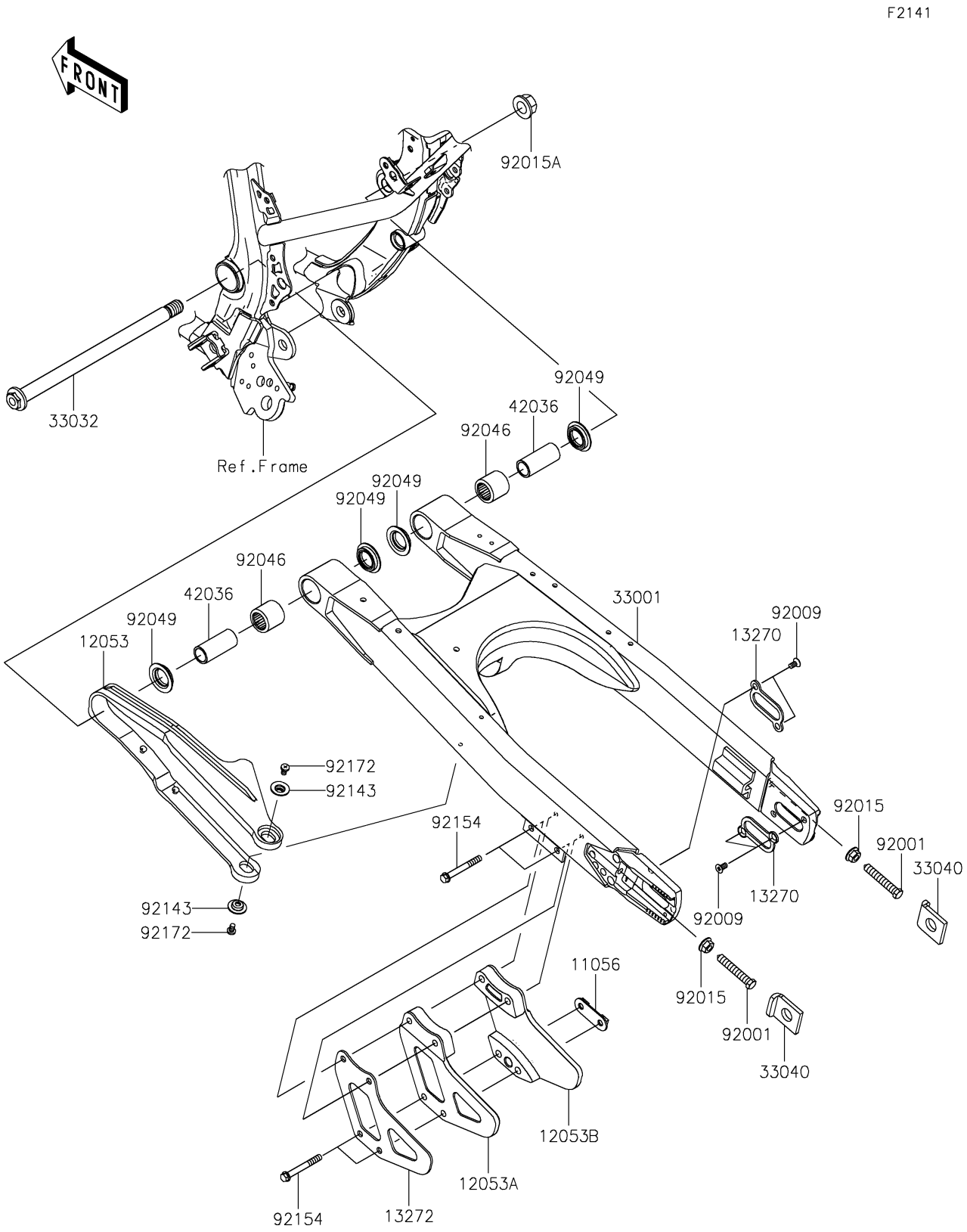

© 2026 Kawasaki Motors Corp., U.S.A.

2020 KLX®230R

PARTS LIST

Swingarm

ITEM NAME	PART NUMBER	QUANTITY
BRACKET,WITH NUT (Ref # 11056)	11056-2396	1
GUIDE-CHAIN (Ref # 12053)	12053-0267	1
GUIDE-CHAIN,OUTER (Ref # 12053A)	12053-0268	1
GUIDE-CHAIN,INNER (Ref # 12053B)	12053-0269	1
PLATE (Ref # 13270)	13270-1899	2
PLATE,GUIDE-CHAIN (Ref # 13272)	13272-2610	1
ARM-COMP-SWING (Ref # 33001)	33001-0709	1
SHAFT-SWING ARM,15X243 (Ref # 33032)	33032-0060	1
ADJUSTER-CHAIN (Ref # 33040)	33040-0032	2
SLEEVE,15X20X46 (Ref # 42036)	42036-0831	2
BOLT,8X46 (Ref # 92001)	92001-1179	2
SCREW,5X10 (Ref # 92009)	92009-1828	4
NUT,FLANGED,8MM (Ref # 92015)	92015-1014	2
NUT,14MM (Ref # 92015A)	92015-1407	1
BEARING-NEEDLE,BM202726 (Ref # 92046)	92046-1110	2
SEAL-OIL,ARM (Ref # 92049)	92049-1109	4
COLLAR (Ref # 92143)	92143-1676	2
BOLT,FLANGED,6X50 (Ref # 92154)	92154-1193	4
SCREW,5X8 (Ref # 92172)	92172-0119	2

© 2026 Kawasaki Motors Corp., U.S.A.