2004 Prairie 700 4x4

PARTS DIAGRAM

Generator

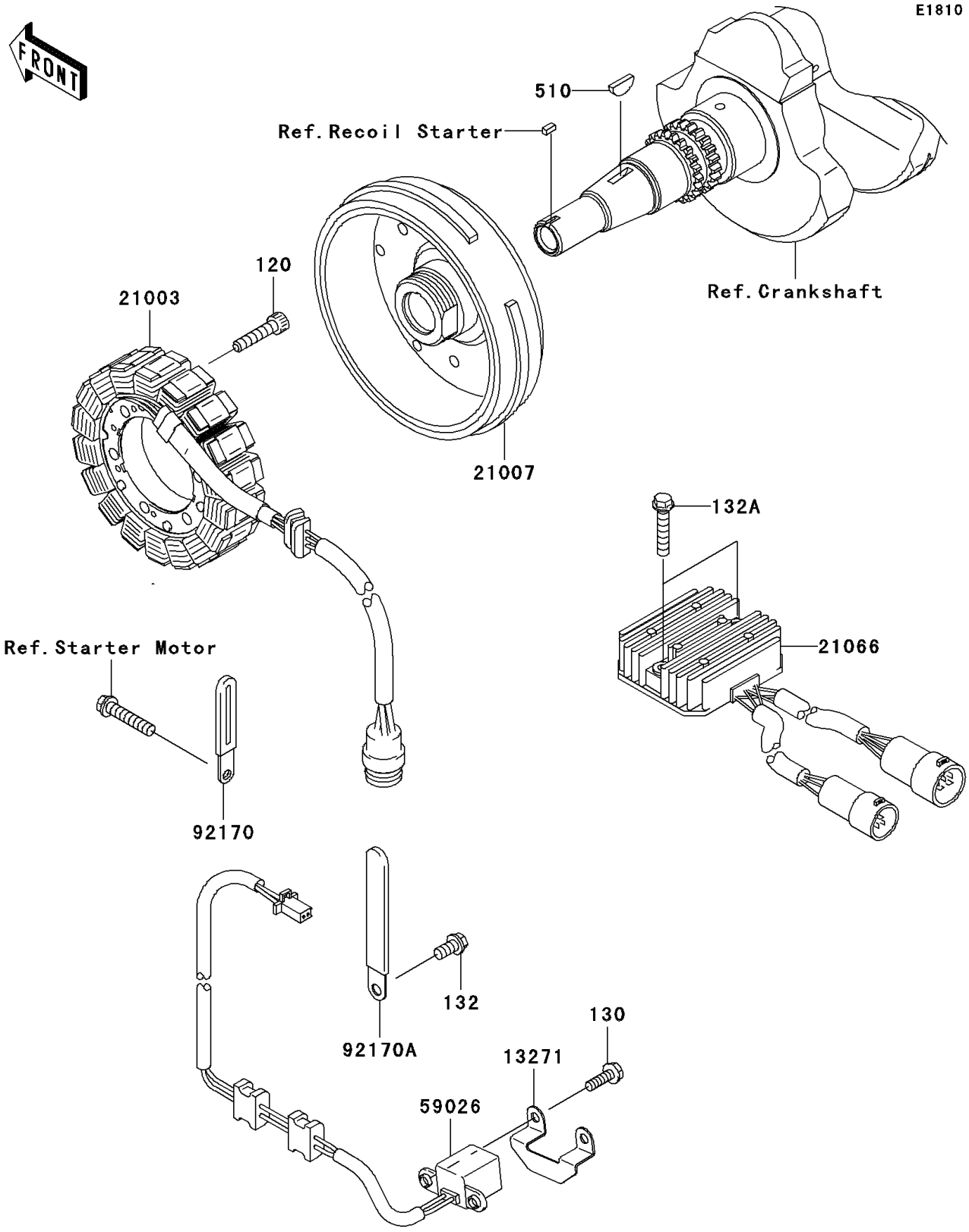

© 2026 Kawasaki Motors Corp., U.S.A.

2004 Prairie 700 4x4

PARTS LIST

Generator

ITEM NAME	PART NUMBER	QUANTITY
BOLT-SOCKET,6X28 (Ref # 120)	120P0628	3
BOLT-FLANGED,5X16 (Ref # 130)	130G0516	2
BOLT-FLANGED-SMALL,6X12 (Ref # 132)	132Y0612	1
BOLT-FLANGED-SMALL,6X30 (Ref # 132A)	132Y0630	2
KEY-WOODRUFF (Ref # 510)	510A4200	1
PLATE (Ref # 13271)	13271-1369	1
STATOR (Ref # 21003)	21003-1359	1
ROTOR (Ref # 21007)	21007-1367	1
REGULATOR-VOLTAGE (Ref # 21066)	21066-1112	1
COIL-PULSING (Ref # 59026)	59026-1159	1
CLAMP (Ref # 92170)	92170-1514	1
CLAMP (Ref # 92170A)	92170-1925	1

© 2026 Kawasaki Motors Corp., U.S.A.